DISCOVERER RESEARCH PROGRAM

EJECTION OF COMMUNICATION PACKAGE

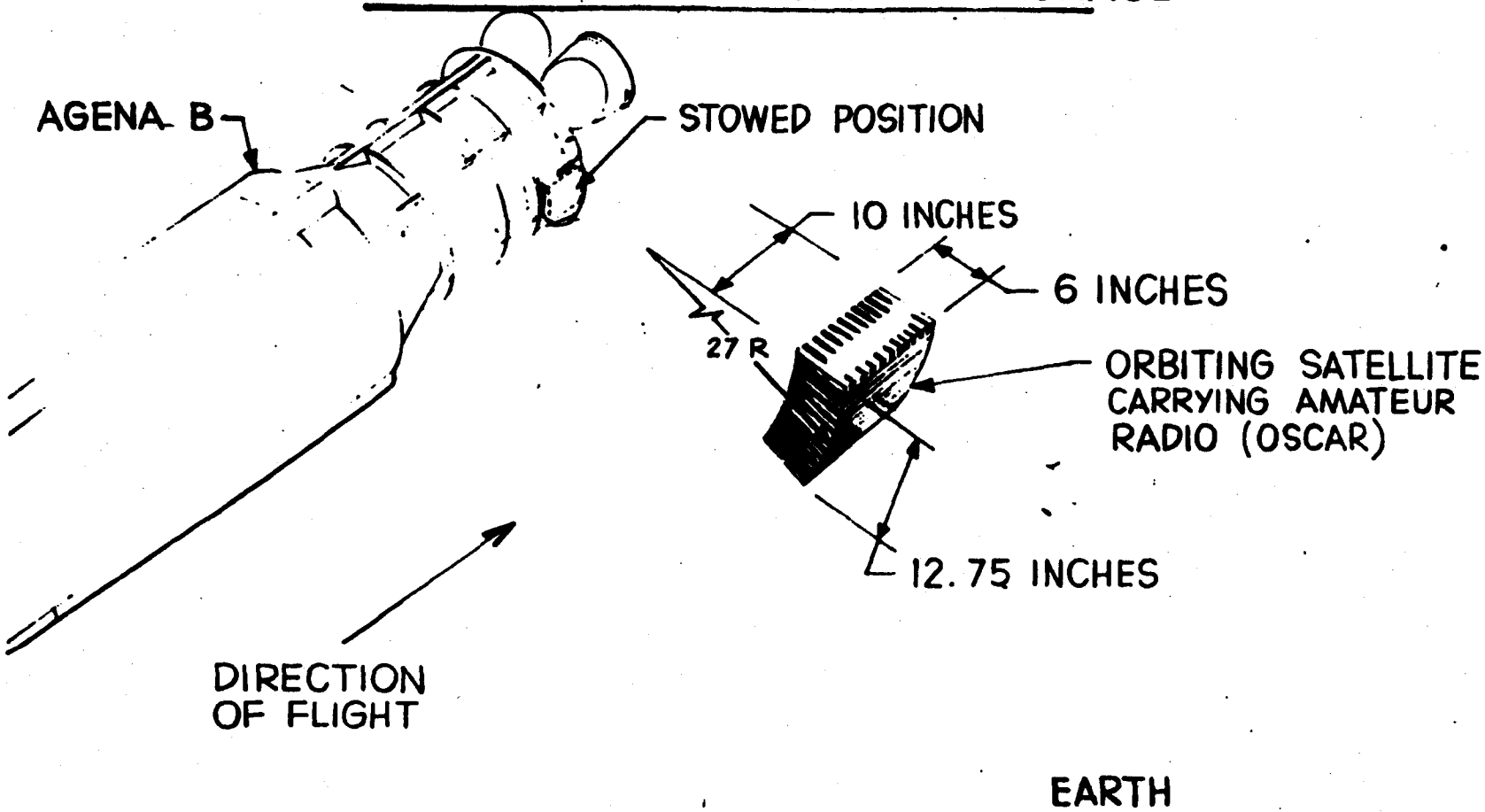

DISCOVERER RESEARCH PROGRAM

PROPOSED GEOPHYSICAL EXPERIMENTS

	FTV NUMBER	1124	1125	1126	1132	1127	1128	1134	1129	1130	1131	1133	1135	1136
	DOOR NUMBER	112	113	114	115	116	117	118	119	120	121	122	123	124
1	EROISON DETECTOR													
2	IMPEDANCE PROBE 1A													
	TEMP. COMMUTATOR													VELA HOTEL
3	COSMIC RAY MON. 7B													
1	DENSITY GAGE MOD 3A													
3	RADIOMETER, MODEL 4													
3	RADIOMETER, MODEL 5													
1	CHARGED PARTICLE ENERGY													
4	COSMIC RAY MONITOR 8B													
2	GALACTIC RF MON, 3													
1	ELECTRON DENSITY GAGE 2C													
3	ULTRA VIOLET RADIOMETER													
2	GALACTIC RF MON 2													
	RETARD POTENT. ANALYZER													
1	ION TRAP													
	BETA-GAMMA DETECTOR													
	TISSUE EQUIVALENT CHAMBER													
2	IMPEDANCE PROBE 2													
1	MAGNETOMETER													
2	20/40 TRANSMITTER													
	NEUTRON DETECTOR 3													
	MASS SPECTROMETER													
	RADIOMETER, MODEL 6													
	MICROMETEORITE DETECTOR, GRID-ACOUSTIC													

1. EXPERIMENT MOUNTED ON ERECTABLE BOOM . TWO TAPE ANTENNAE REQUIRED . SENSORS FACING EARTH
. SENSOR FACING ZENITH

F-6462 DISC 2/10/62

DISCOVERER RESEARCH PROGRAM

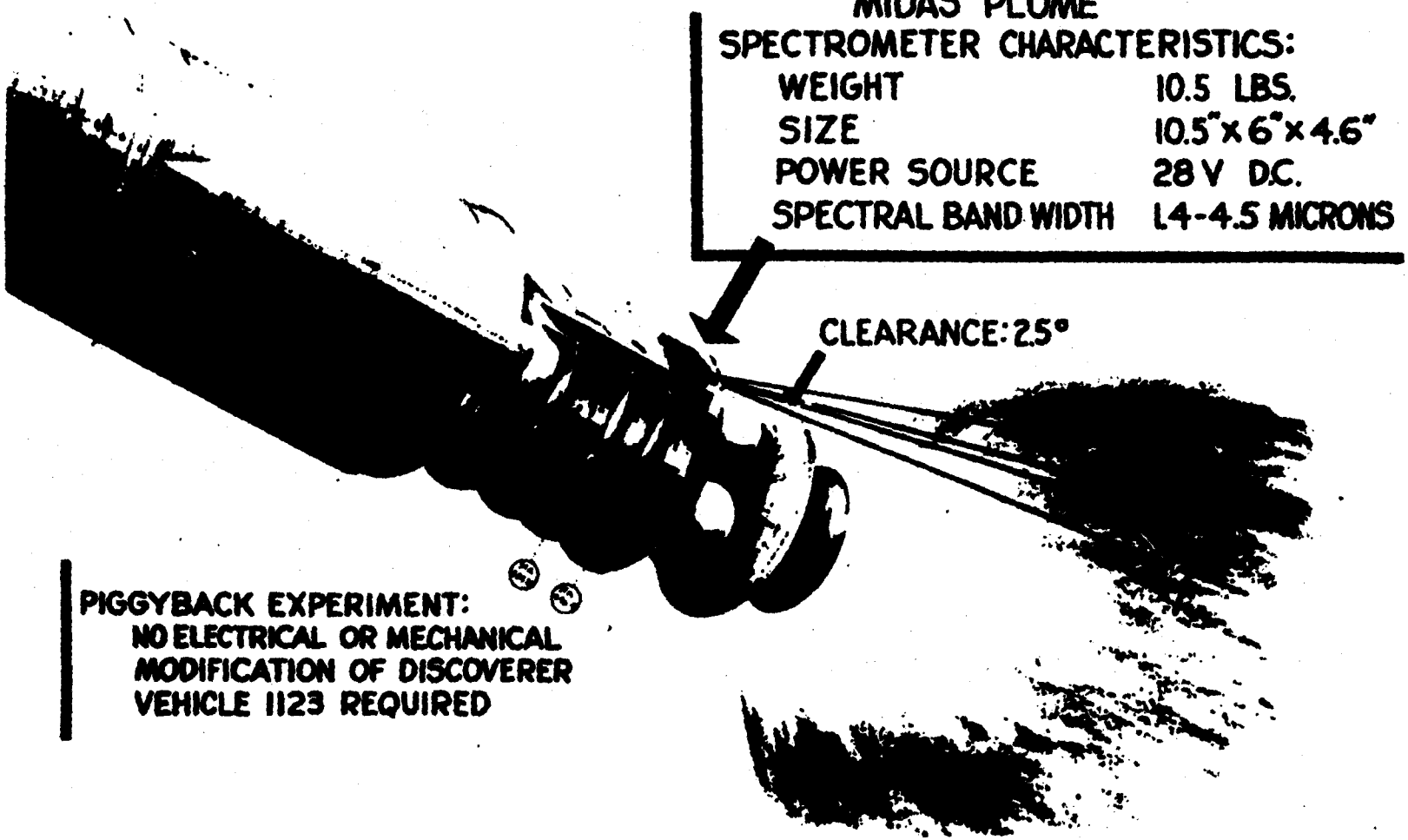

DISCOVERER RESEARCH PROGRAM

THERMOELECTRIC BOOM

NOTES

1 TEST OBJECTIVE DETERMINE THE OPERATING CHARACTERISTICS OF A THERMOELECTRIC GENERATOR IN SPACE ENVIRONMENT

2 OPERATION
- A THERMOELECTRIC GENERATOR EXTEND IN PLACE AFTER VEHICLE PLACED IN ORBIT
- B ACTIVE LIFE OF THERMAL ELECTRIC GENERATOR SYSTEM 4 DAYS

3 THERMAL ELECTRIC BOOM WEIGHT 9.0 LBS

4 TELEMETRY SYS, LINK II (WEIGHT 24 LBS)
- A TAPE RECORDER
- B COMMUTATOR
- C T/M BOX
- D DRP SWITCH BOX
- E DRP JUNCTION BOX

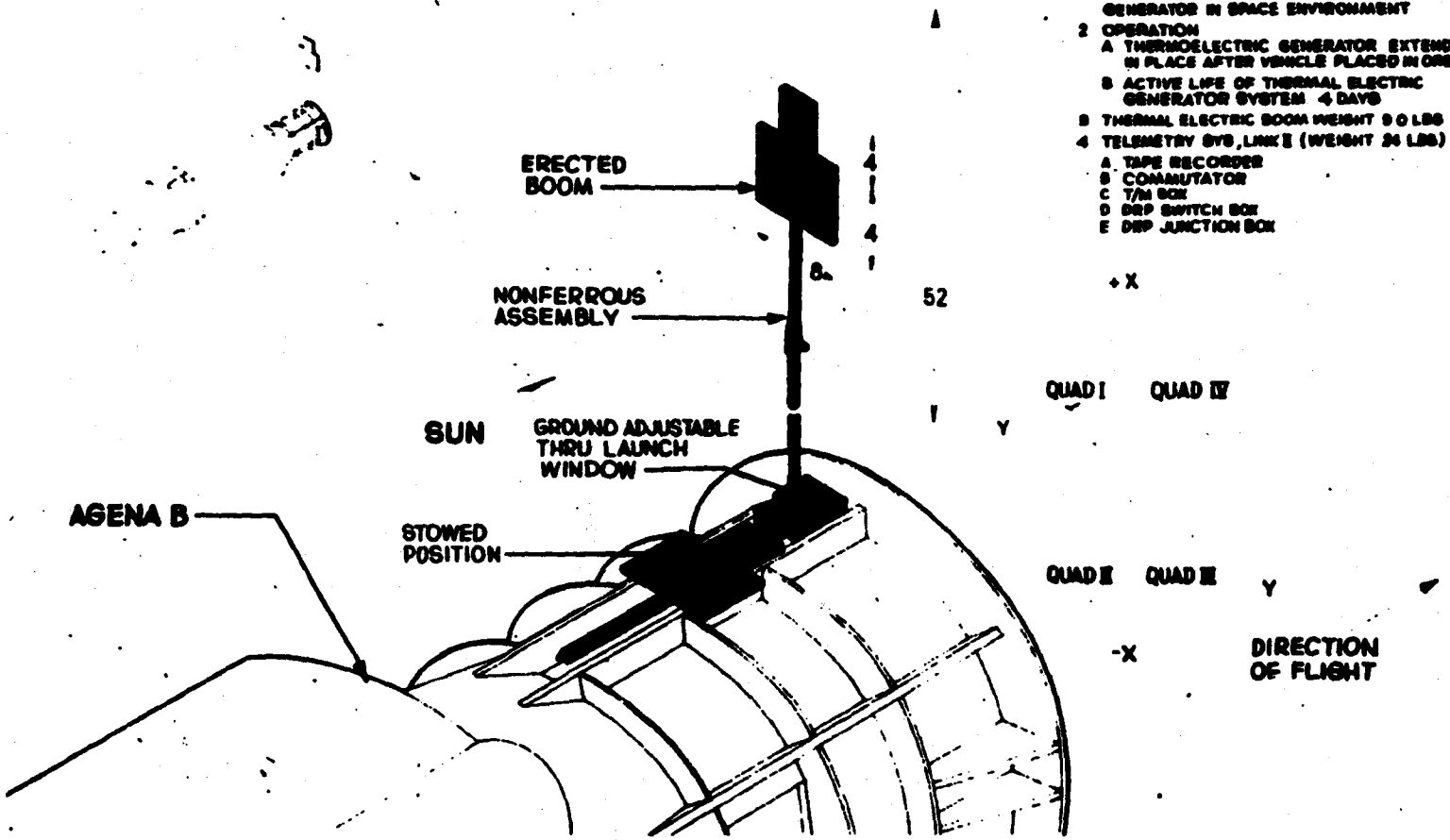

DISCOVERER RESEARCH PROGRAM

HORIZON SENSOR EXPERIMENT

OBJECTIVES:

TO EVALUATE THE PERFORMANCE OF A HORIZON SENSOR FOR CONTROL OF VEHICLE ORIENTATION

EQUIPMENT:

2 HORIZON SCANNERS
1 MIXER BOX
1 PRE-AMP. BOX
TOTAL EQUIP. WT. 13.5 LBS.

TELEMETRY:

7 INSTRUMENTATION POINTS WITH 2 ON CONT CH
REAL TIME DATA VIA LINK II T/M
POWER REQUIREMENTS, 12 WATTS

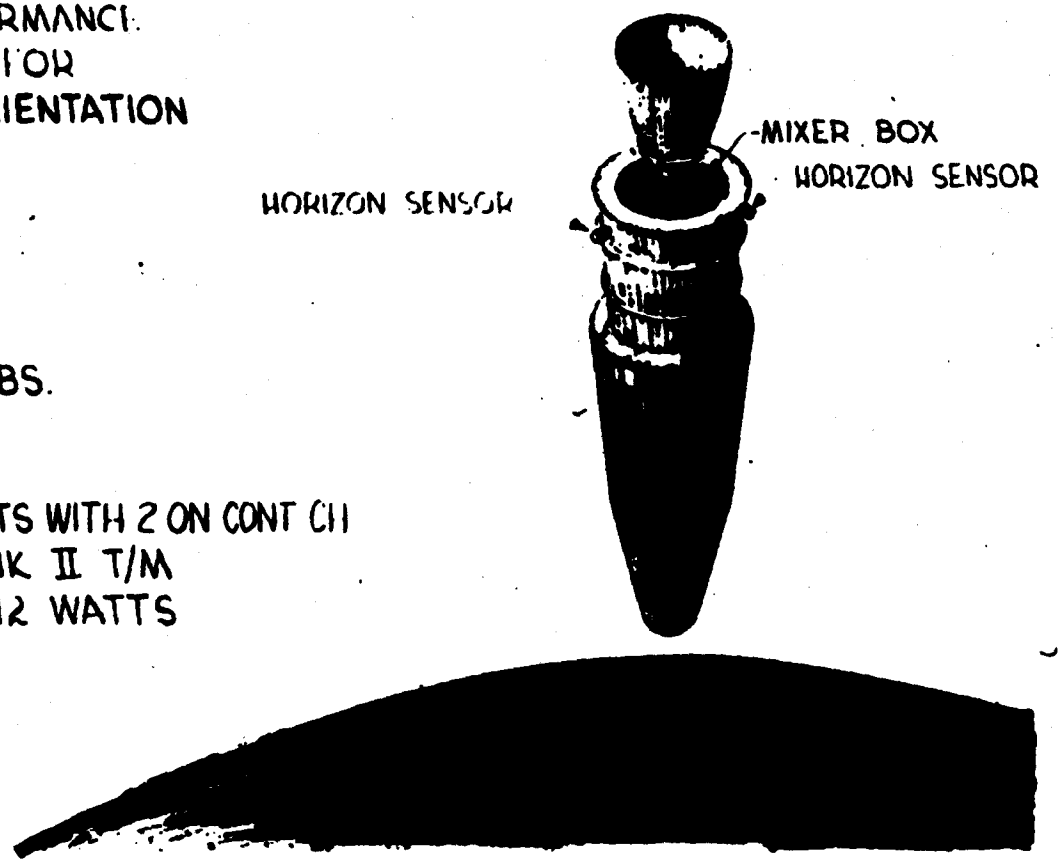

1-6460 DISC 2-10-62
CY-5-1

DISCOVERER RESEARCH PROGRAM

ULTRA VIOLET RADIOMETER EXPERIMENT

OBJECTIVE:
TO DETERMINE THE OZONE DISTRIBUTION AS A FUNCTION OF ALTITUDE

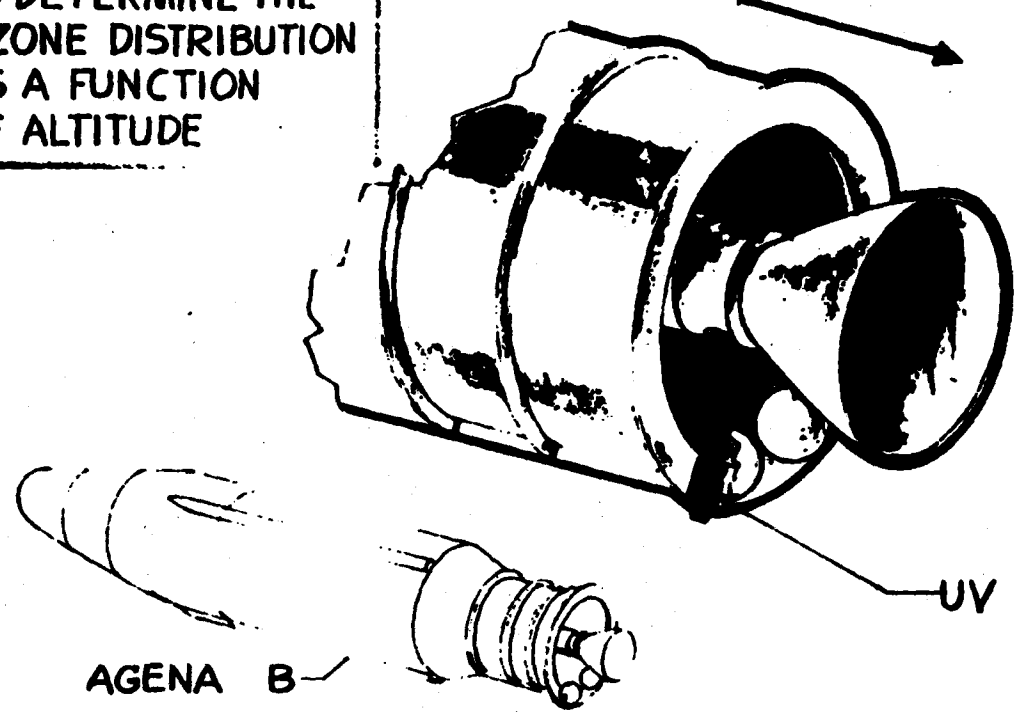

COMMUNICATIONS:
- 4 INSTRUMENTATION POINTS
- REAL TIME DATA VIA LINK II T/M
- RECORDED DATA ON DUAL TRACK 180 MIN. TAPE RECORDER (27:1 RATIO).

DISCOVERER RECOVERY CAPSULE

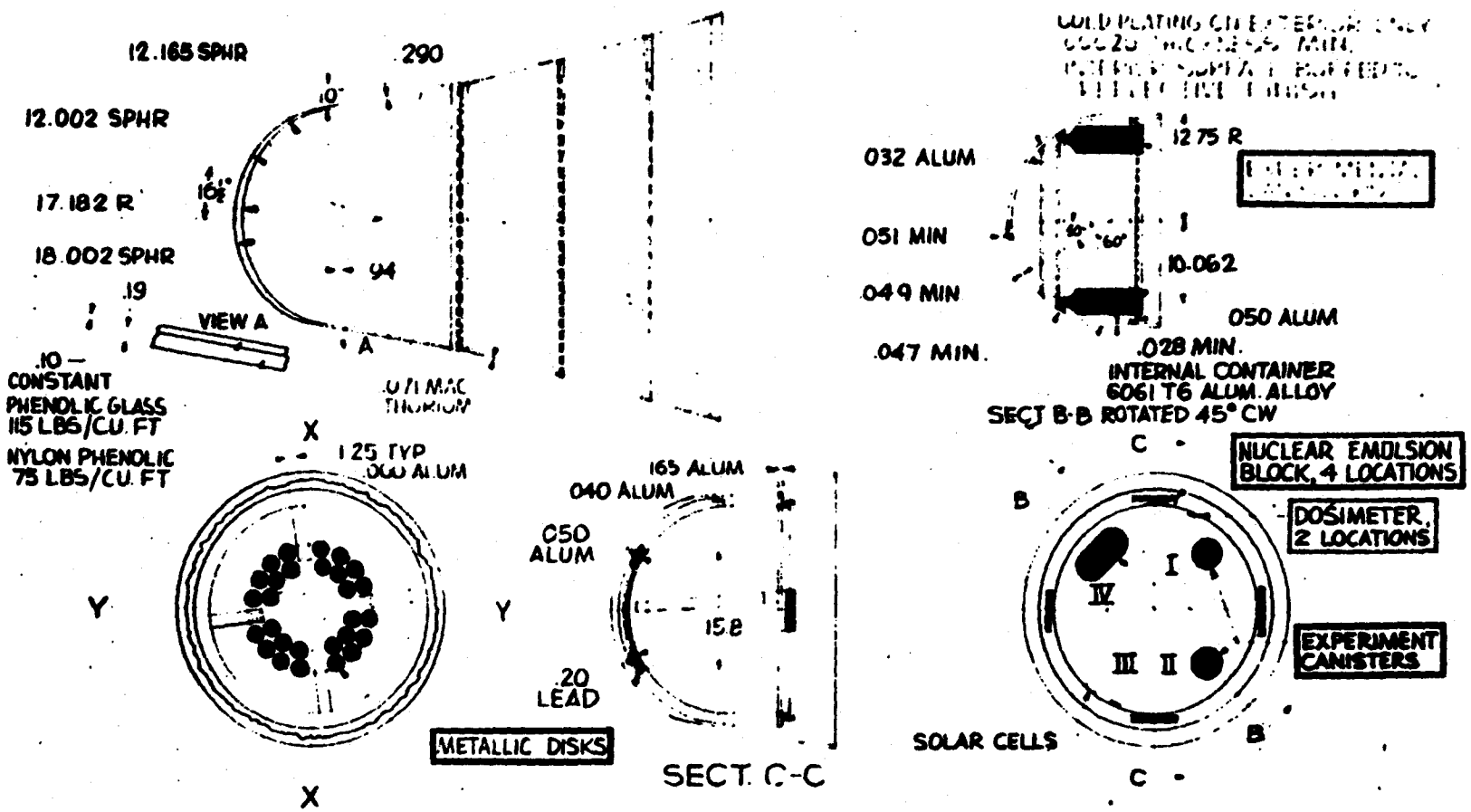

K-6033 "DISC" 12/6/61
CY-6-1

DISCOVERER RESEARCH PROGRAM

RADIOMETER TEST

OBJECTIVE:

TO MEASURE BACKGROUND RADIATION IN SUPPORT OF MIDAS PROGRAM.

NOTES:

1. RADIOMETER ASSY. WT. 50 LBS.
2. DATA FROM THE TEST WILL BE OBTAINED VIA LINK II FM/FM T/M SYSTEM.

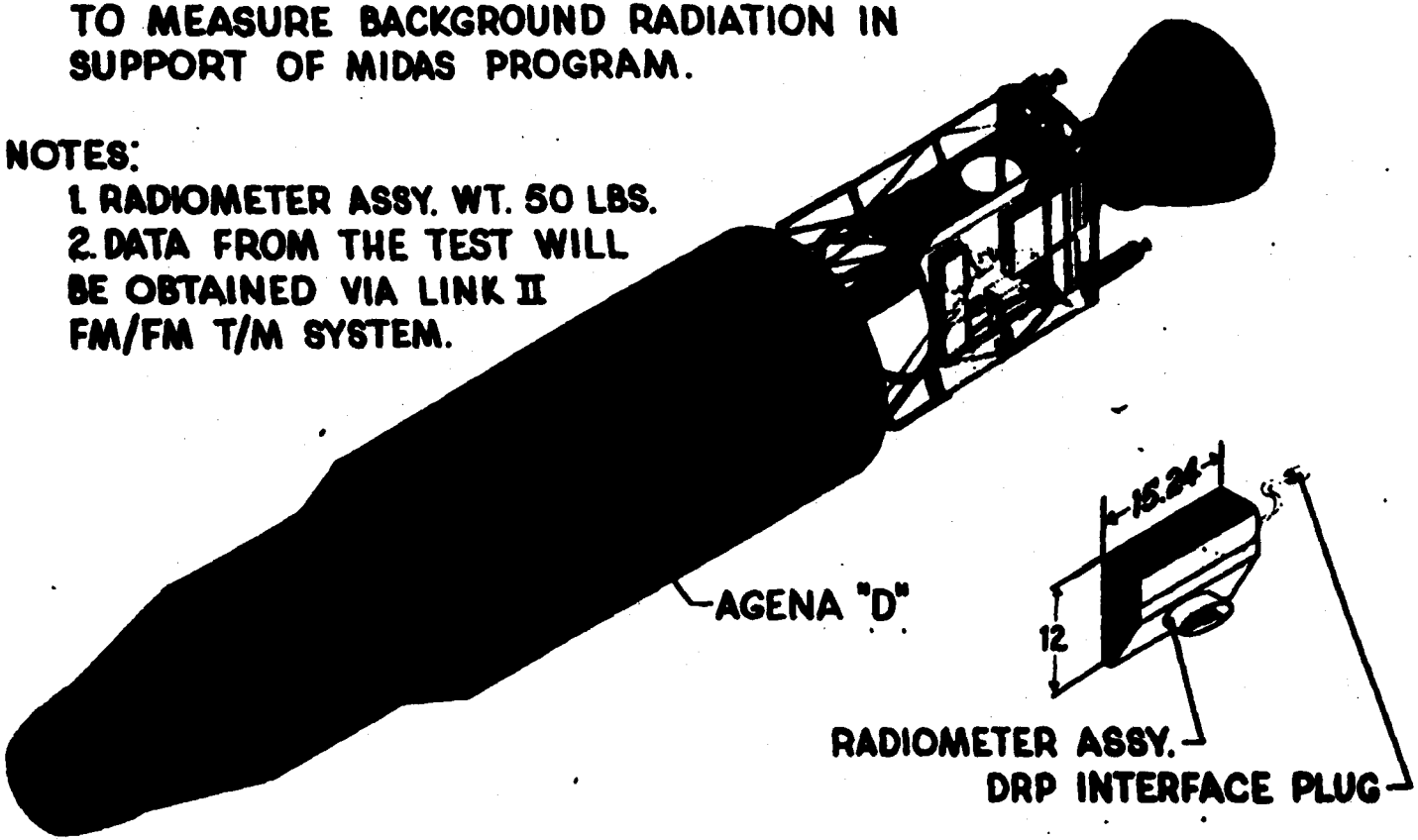

COVERER RESEARCH PROGRAM

RECESSED & LARGE DOOR MODULES

NOTES:
- TEST OBJECTIVES: TO PROVIDE A BASIC CAPABILITY FOR CONDUCTING SPACE ENVIRONMENT AND MATERIAL EXPERIMENTS
- MODULE WEIGHT
  - LARGE DOOR WITH BASIC EQUIP. - 55 LBS
  - RECESSED DOOR, VARIABLE
- ACTIVE LIFE OF MODULES - 4 DAYS
- BASIC EQUIP ON LARGE DOOR MODULE
  - TAPE RECORDER
  - PROGRAMMER
  - TWO COMMUTATORS
  - TIME REFERENCE GENERATOR
  - DC/DC POWER SUPPLY

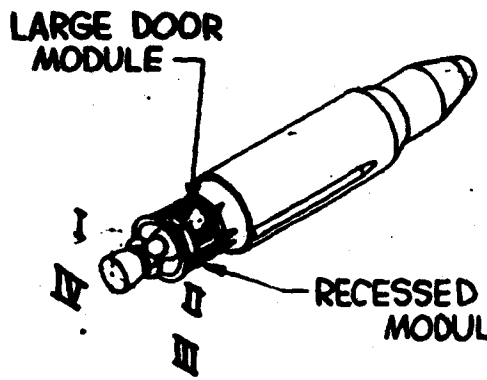

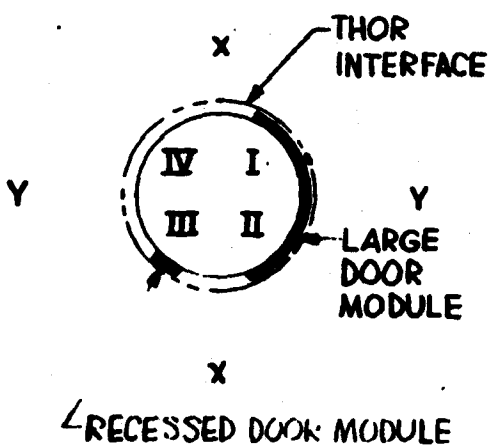

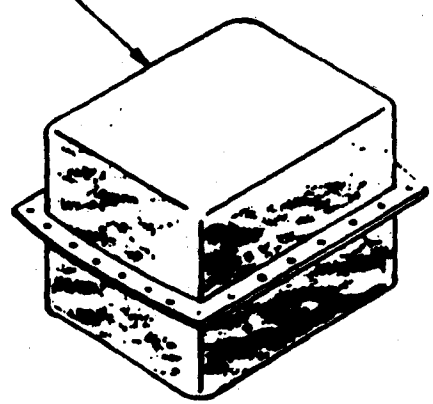

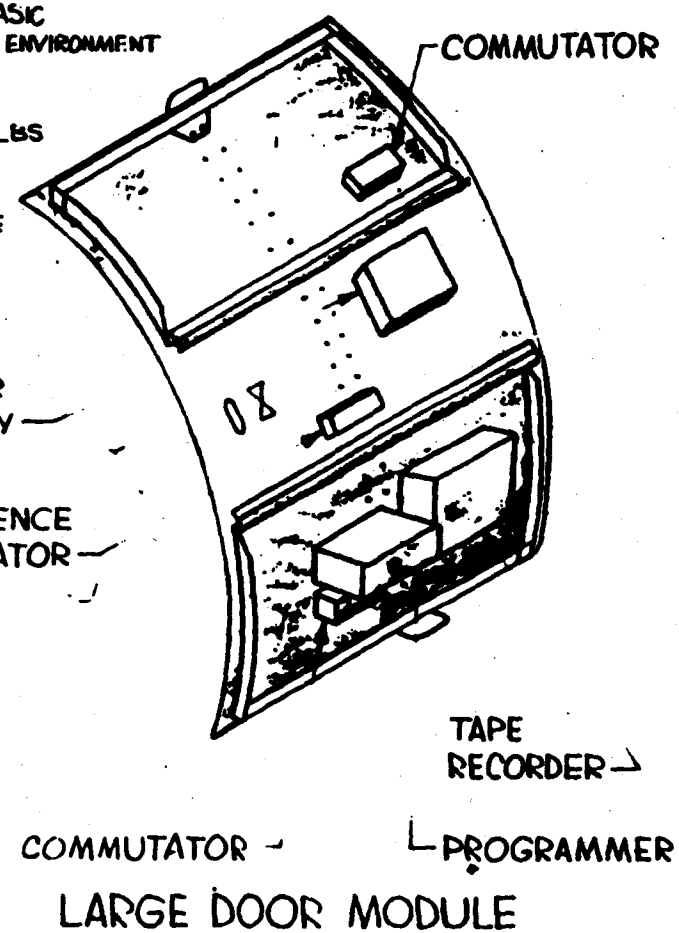

DISCOVERER RESEARCH PROGRAM

RE-ENTRY RESEARCH VEHICLE

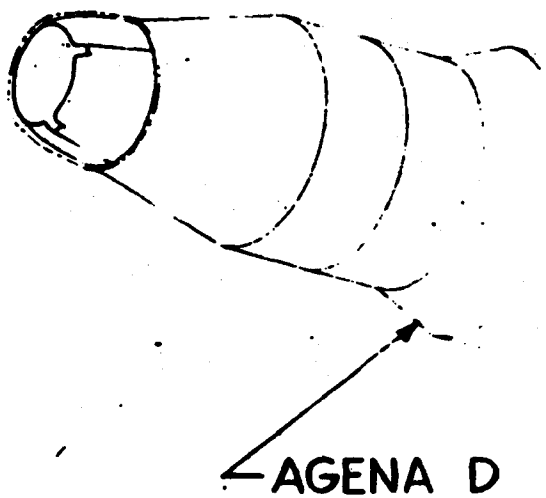

ORBIT DIRECTION

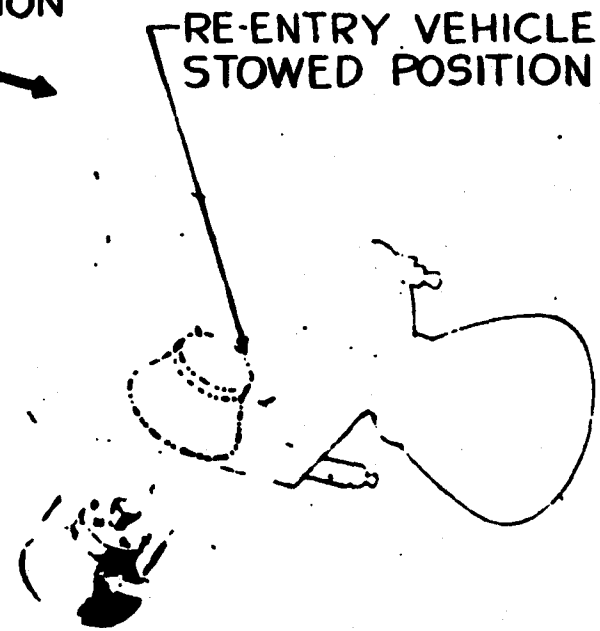

OBJECTIVE:
TO PROVIDE A SECONDARY RE-ENTRY VEHICLE FOR RESEARCH EXPERIMENTS

DISCOVERER RESEARCH PROGRAM

RE-SEARCH RE-ENTRY VEHICLE

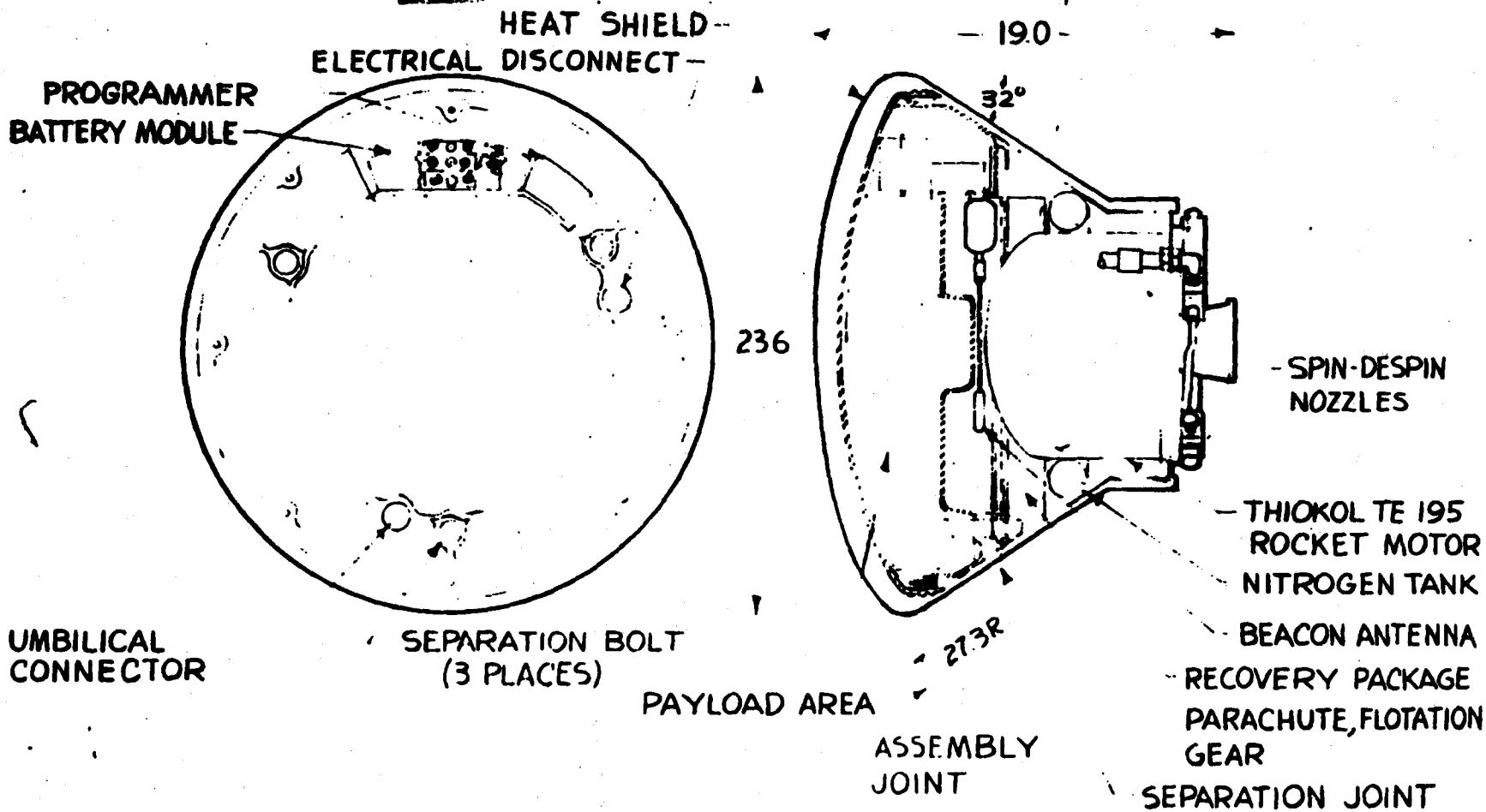

[redacted]ER RESEARCH PROGRA[redacted]

ALTERNATE STOWAGE CONCEPT OF RE-ENTRY RESEARCH VEHICLES

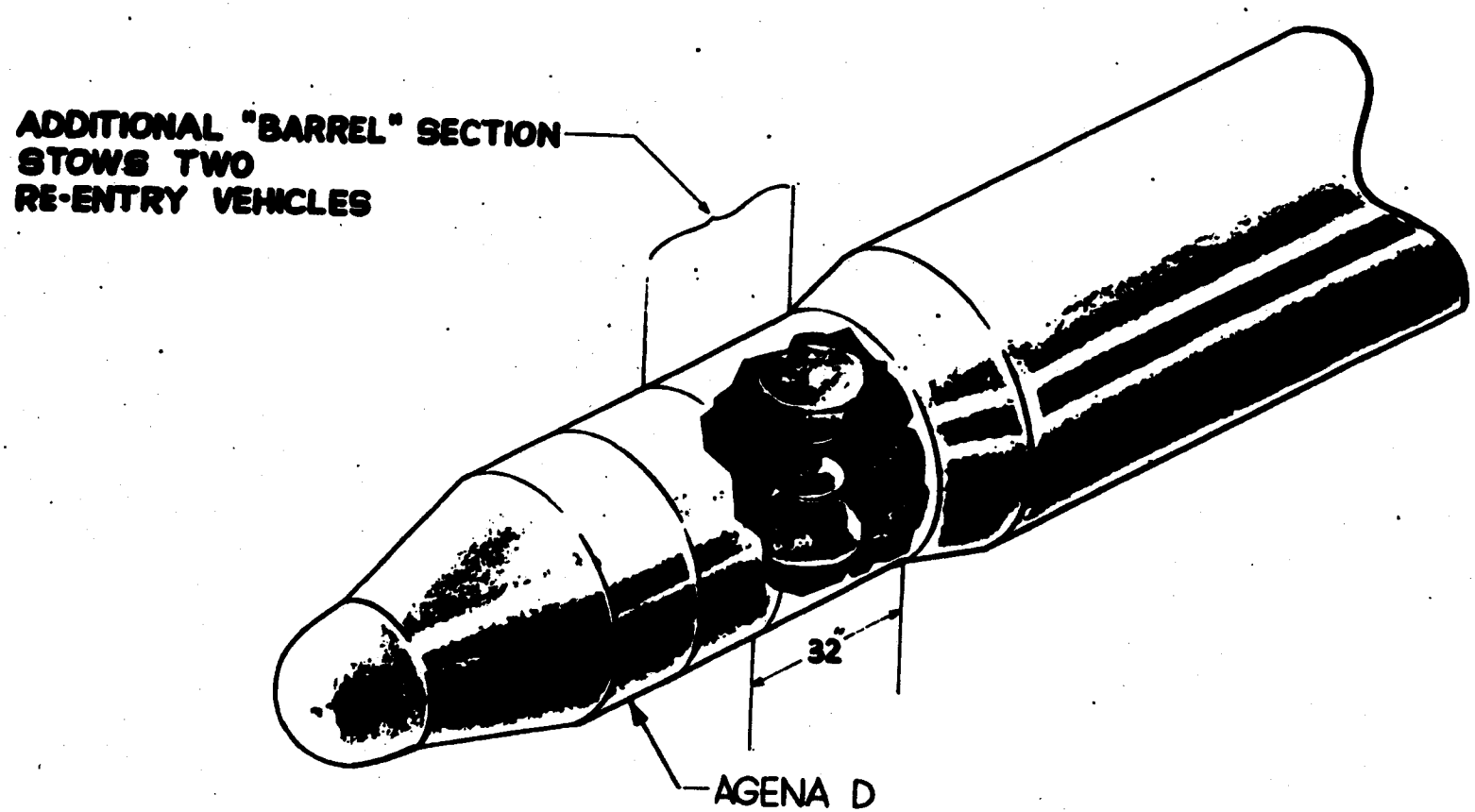

P-0467 'DSC' 2-11-62
[illegible]

SOLAR REFLECTOR SYSTEM INSTALLATION

DISCOVERER

NOTE:

1. TEST OBJECTIVE: DETERMINE THE DELETERIOUS EFFECTS OF SPACE ENVIRONMENT ON SOLAR REFLECTORS.
2. OPERATION
   - A. REFLECTOR DEPLOYED ON ORBIT
   - B. VEH. RESTABILIZED & MAINTAINED ACTIVE FOR AS MANY ORBITS AS POSSIBLE TO PROVIDE SUN ORIENTATION TESTS
   - C. TUMBLING VEH. PROVIDES USEFUL TEST DATA THRU LINK IV FOR AN ADDITIONAL 24 DAYS MINIMUM
3. SOLAR REFLECTOR WEIGHT - 65 POUNDS
4. TELEMETER SYS. (LINK IV) WEIGHT 14 POUNDS
   - A. TAPE RECORDER (27:1 RATIO; 180 MIN R/I)
   - B. TRANSMITTER - VHF
   - C. POWER SUPPLY (DC-DC CONVERTER)
   - D. VOLTAGE CONTROL OSCILLATOR
   - E. COMMUTATOR (.1 X 60)
   - F. PRE-AMP
   - G. COMMAND RECEIVER

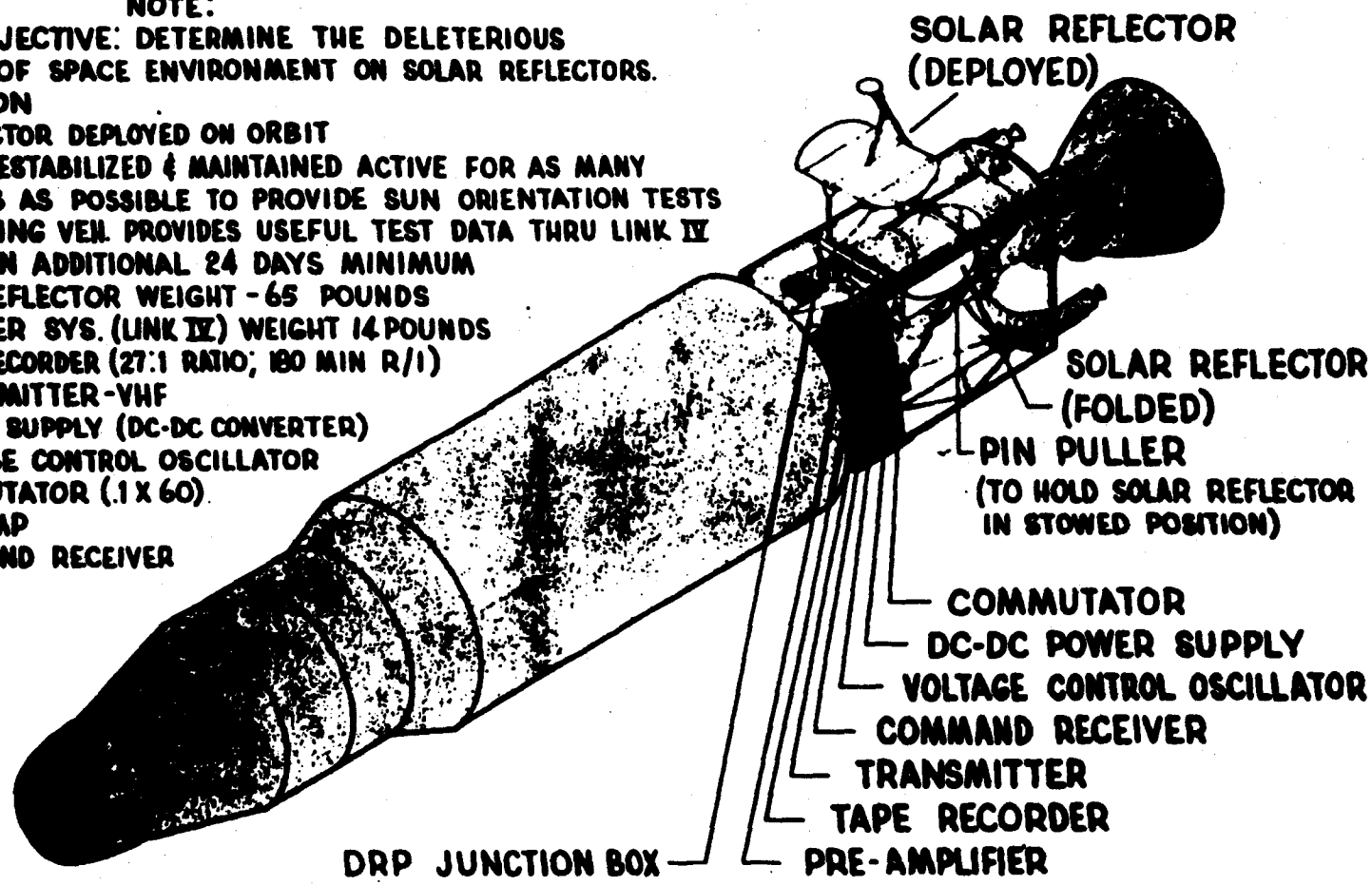

[redacted]

[redacted] DISCOVERER RESEARCH PROGRAM

EJECTION OF COMMUNICATION PACKAGE

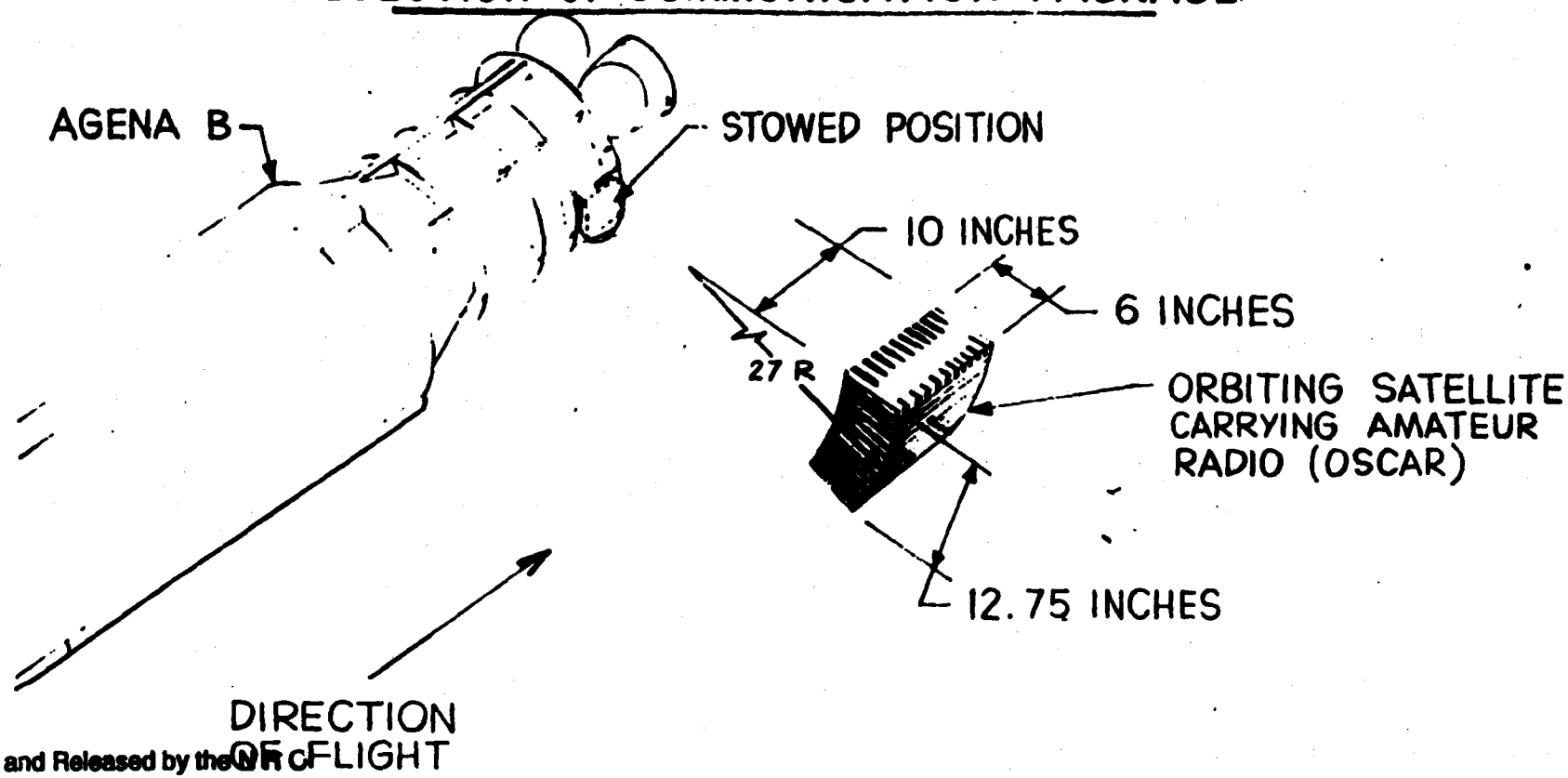

Declassified and Released by the NRO
In Accordance with E. O. 12958
on NOV 26 1997

DISCOVERER RESEARCH PROGRAM

PROPOSED GEOPHYSICAL EXPERIMENTS

	FTV NUMBER	1124	1125	1126	1132	1127	1128	1134	1129	1130	1131	1133	1135	1136
	DOOR NUMBER	112	113	114	115	116	117	118	119	120	121	122	123	124
1	EROISON DETECTOR													
2	IMPEDANCE PROBE 1A													
	TEMP. COMMUTATOR													VELA HOTEL
2	COSMIC RAY MON. 7B													
1	DENSITY GAGE MOD 3A													
3	RADIOMETER, MODEL 4													
3	RADIOMETER, MODEL 5													
1	CHARGED PARTICLE ENERGY													
4	COSMIC RAY MONITOR 8B													
2	GALACTIC RF MON, 3													
1	ELECTRON DENSITY GAGE 2C													
3	ULTRA VIOLET RADIOMETER													
2	GALACTIC RF MON 2													
	RETARD POTENT. ANALYZER													
1	ION TRAP													
	BETA-GAMMA DETECTOR													
	TISSUE EQUIVALENT CHAMBER													
2	IMPEDANCE PROBE 2													
1	MAGNETOMETER													
2	20/40 TRANSMITTER													
	NEUTRON DETECTOR 3													
	MASS SPECTROMETER													
	RADIOMETER, MODEL 6													
	MICROMETEORITE DETECTOR, SKIN-ACOUSTIC													

1 EXPERIMENT MOUNTED ON ERECTABLE BOOM . TWO TAPE ANTENNAE REQUIRED . SENSORS FACING EARTH
. SENSOR FACING ZENITH

P. 6462 DISC 2/10/62

DISCOVERER RESEARCH PROGRAM

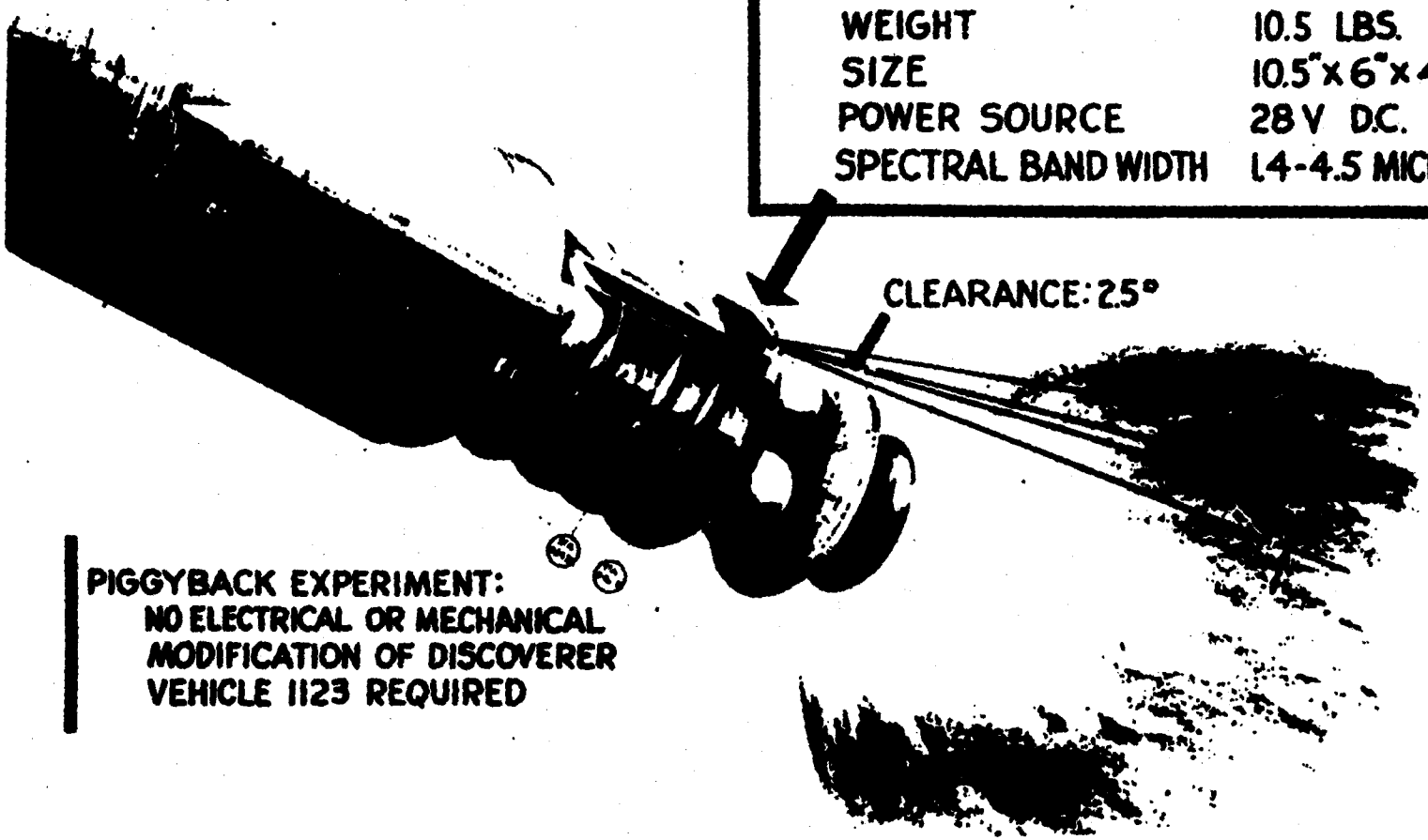

DISCOVERER RESEARCH PROGRAM

THERMOELECTRIC BOOM

NOTES

1 TEST OBJECTIVE DETERMINE THE OPERATING CHARACTERISTICS OF A THERMOELECTRIC GENERATOR IN SPACE ENVIRONMENT

2 OPERATION
- A THERMOELECTRIC GENERATOR EXTEND IN PLACE AFTER VEHICLE PLACED IN ORBIT
- B ACTIVE LIFE OF THERMAL ELECTRIC GENERATOR SYSTEM 4 DAYS

3 THERMAL ELECTRIC BOOM WEIGHT 9.0 LBS

4 TELEMETRY SYS., LINK II (WEIGHT 26 LBS)
- A TAPE RECORDER
- B COMMUTATOR
- C T/M BOX
- D DRP SWITCH BOX
- E DRP JUNCTION BOX

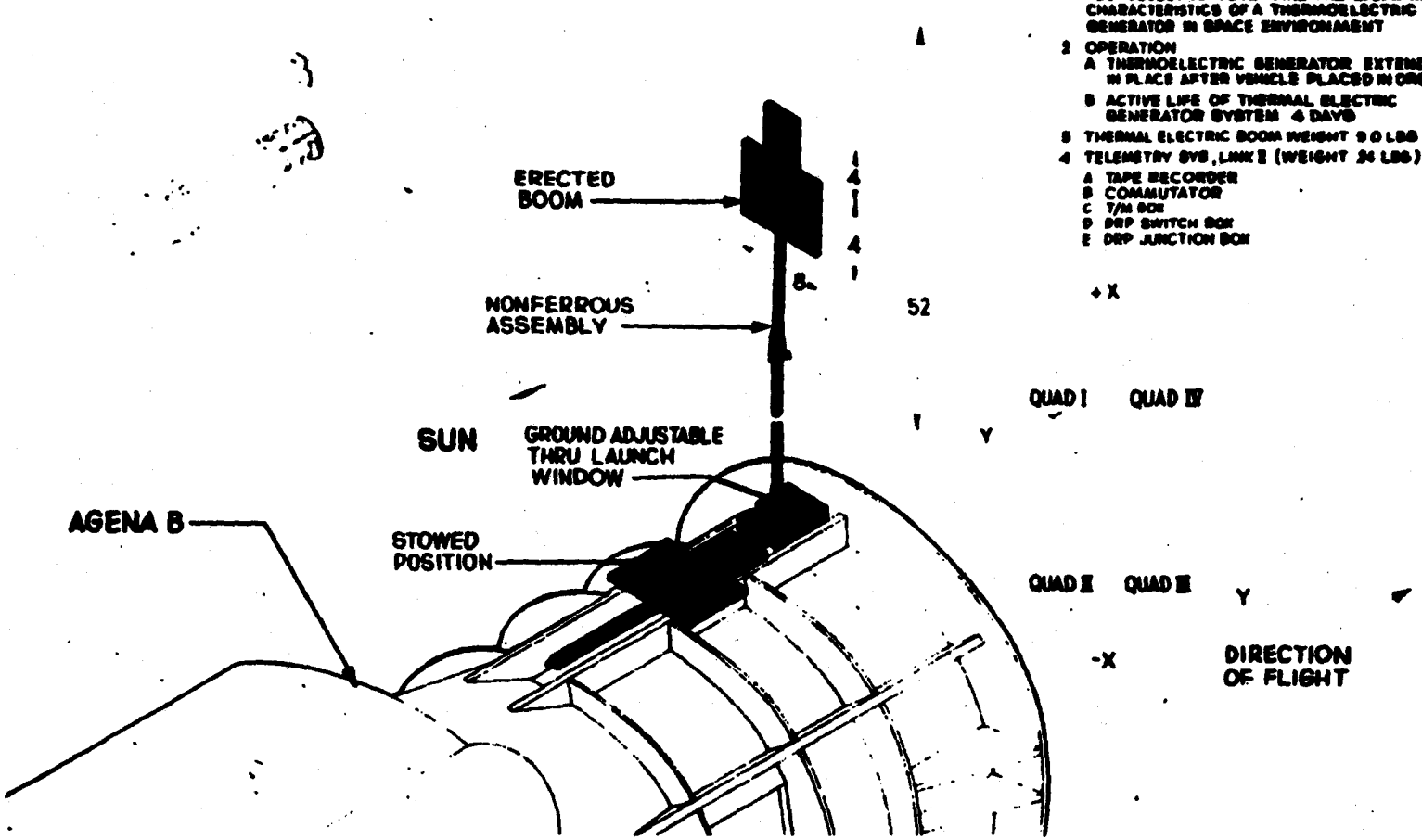

DISCOVERER RESEARCH PROGRAM

HORIZON SENSOR EXPERIMENT

OBJECTIVES:

TO EVALUATE THE PERFORMANCE OF A HORIZON SENSOR FOR CONTROL OF VEHICLE ORIENTATION

EQUIPMENT:

2 HORIZON SCANNERS
1 MIXER BOX
1 PRE-AMP. BOX
TOTAL EQUIP. WT. 13.5 LBS.

TELEMETRY:

7 INSTRUMENTATION POINTS WITH 2 ON CONT CH
REAL TIME DATA VIA LINK II T/M
POWER REQUIREMENTS, 12 WATTS

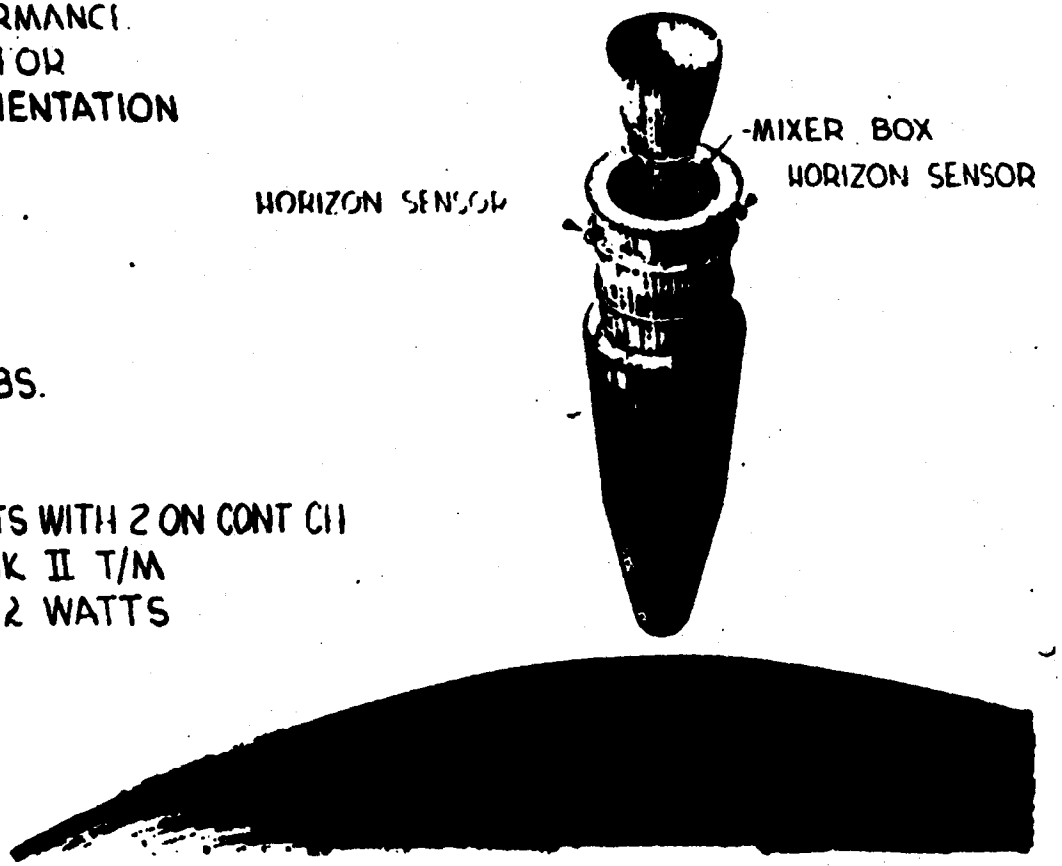

1-6460 DISC 2-NOV-62
CY.S-1

DISCOVERER RESEARCH PROGRAM

ULTRA VIOLET RADIOMETER EXPERIMENT

OBJECTIVE:
TO DETERMINE THE OZONE DISTRIBUTION AS A FUNCTION OF ALTITUDE

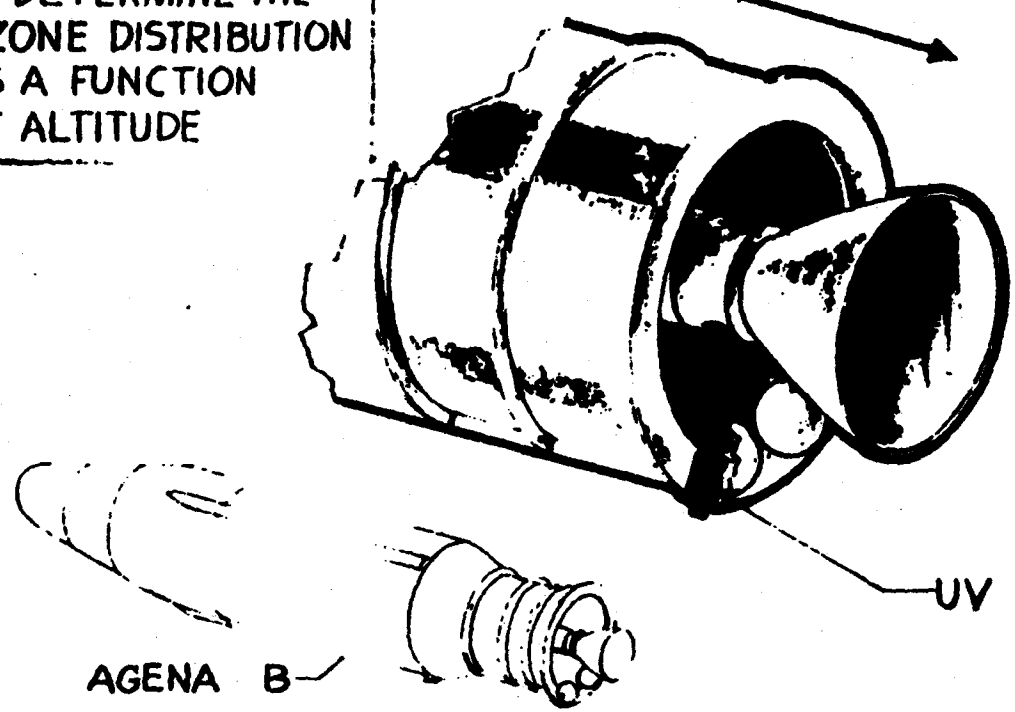

COMMUNICATIONS:
- 4 INSTRUMENTATION POINTS
- REAL TIME DATA VIA LINK II T/M
- RECORDED DATA ON DUAL TRACK 180 MIN. TAPE RECORDER (27:1 RATIO).

DISCOVERER RECOVERY CAPSULE

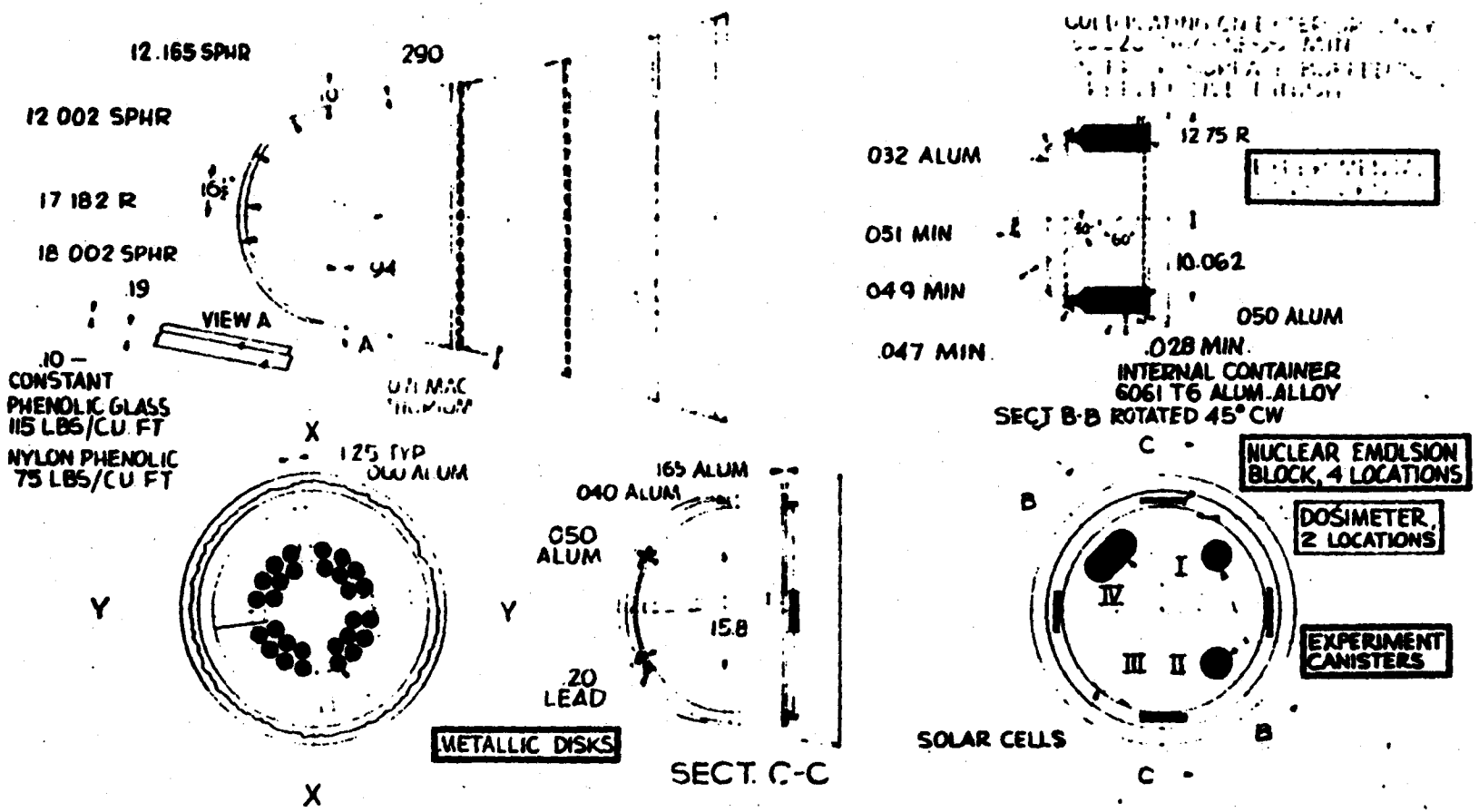

K-6033 "DISC" 12/6/61
CY-5-1

DISCOVERER RESEARCH PROGRAM

RADIOMETER TEST

OBJECTIVE:

TO MEASURE BACKGROUND RADIATION IN SUPPORT OF MIDAS PROGRAM.

NOTES:

1. RADIOMETER ASSY. WT. 50 LBS.
2. DATA FROM THE TEST WILL BE OBTAINED VIA LINK II FM/FM T/M SYSTEM.

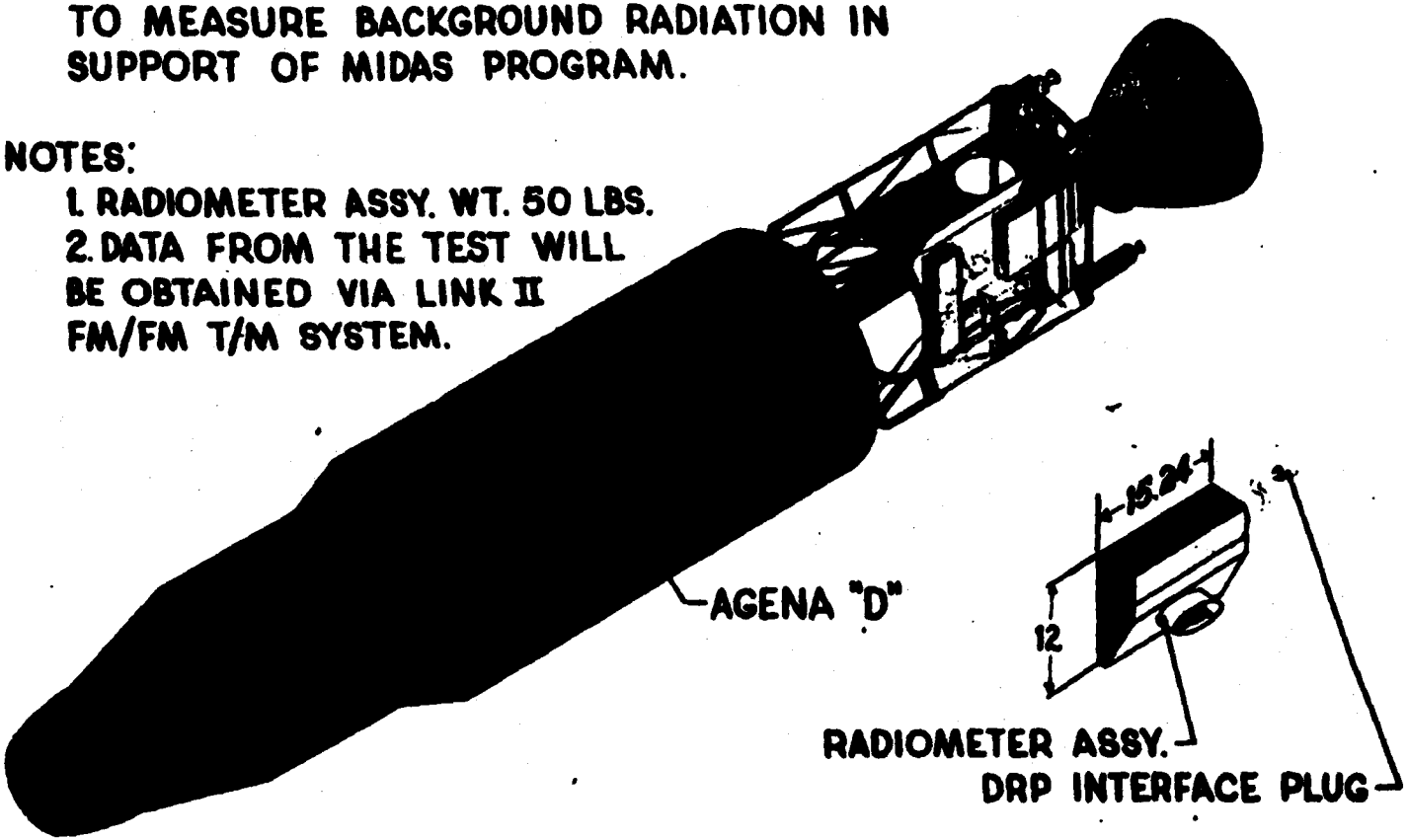

DISCOVERER RESEARCH PROGRAM

RECESSED & LARGE DOOR MODULES

NOTES:

- TEST OBJECTIVES: TO PROVIDE A BASIC CAPABILITY FOR CONDUCTING SPACE ENVIRONMENT AND MATERIAL EXPERIMENTS
- MODULE WEIGHT
  - LARGE DOOR WITH BASIC EQUIP. - 55 LBS
  - RECESSED DOOR, VARIABLE
- ACTIVE LIFE OF MODULES - 4 DAYS
- BASIC EQUIP. ON LARGE DOOR MODULE
  - TAPE RECORDER
  - PROGRAMMER
  - TWO COMMUTATORS
  - TIME REFERENCE GENERATOR
  - DC/DC POWER SUPPLY

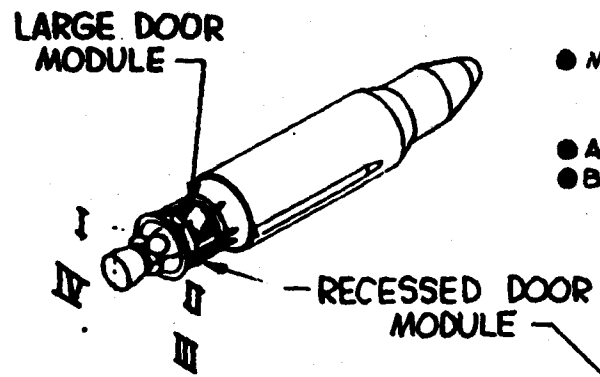

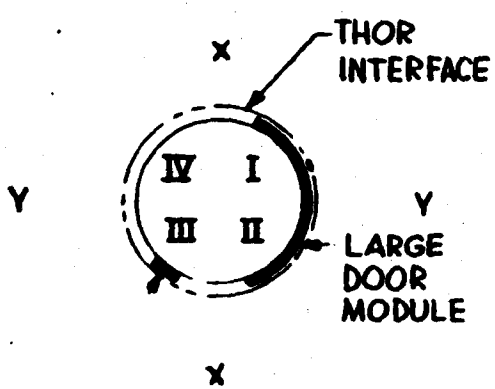

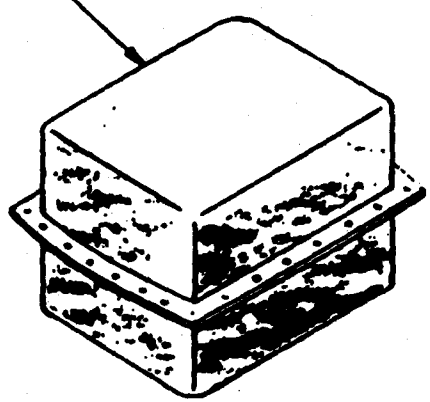

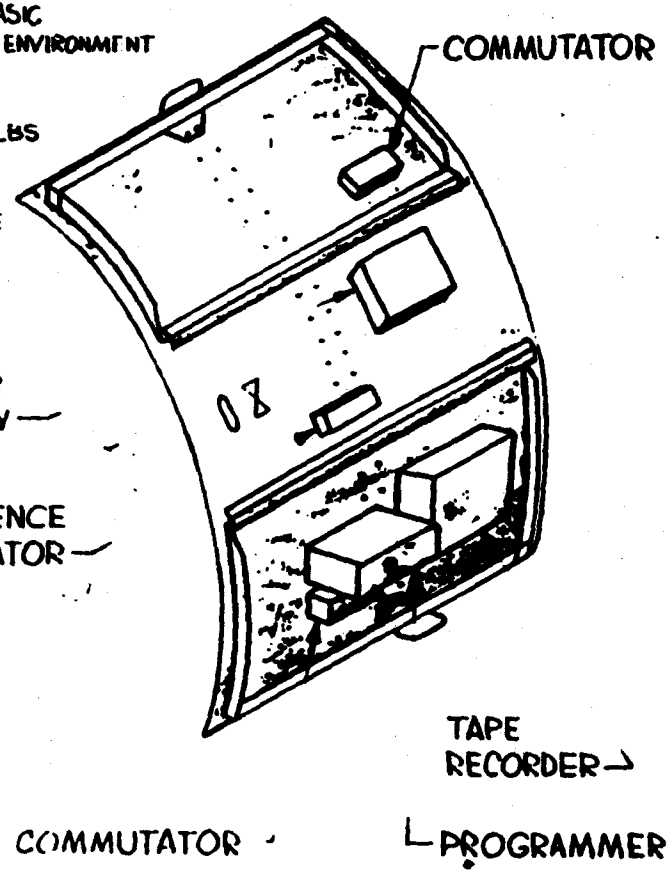

LARGE DOOR MODULE

UNCLASSIFIED

DISCOVERER RESEARCH PROGRAM

RE-ENTRY RESEARCH VEHICLE

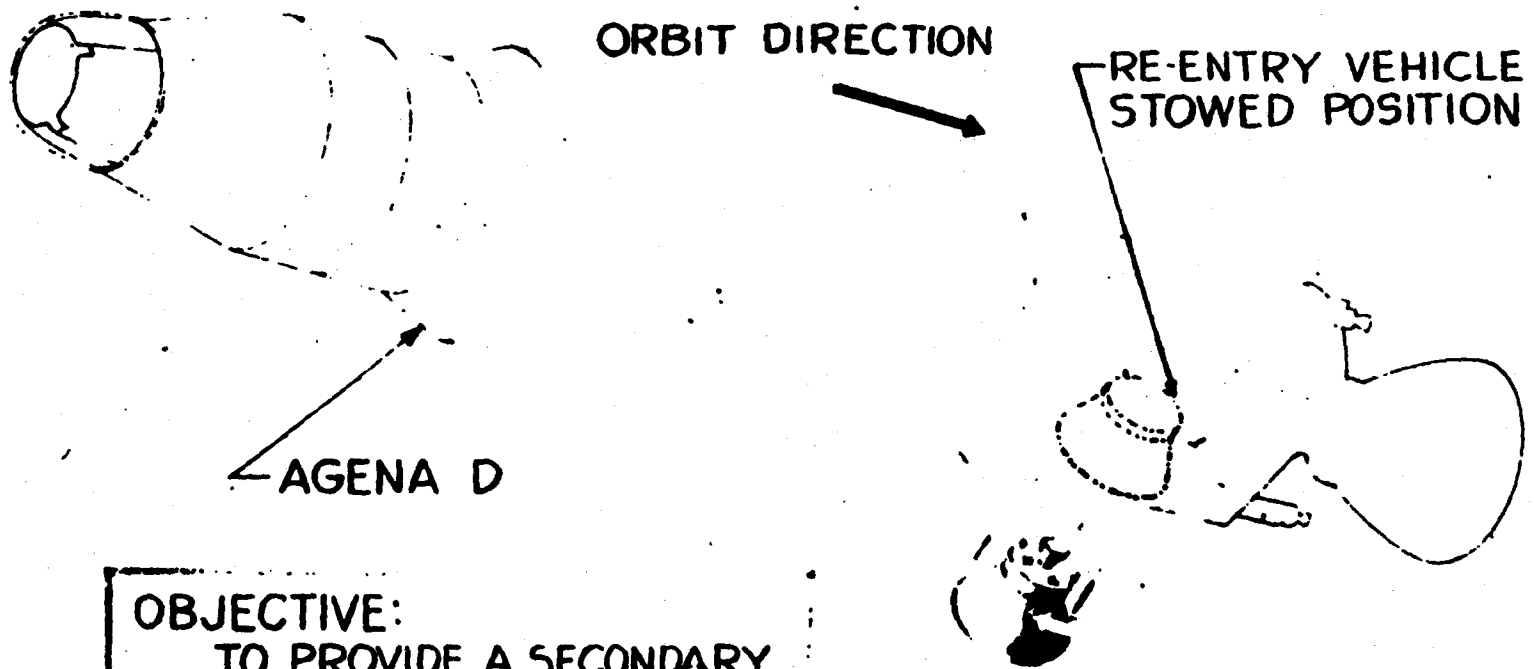

OBJECTIVE:
TO PROVIDE A SECONDARY RE-ENTRY VEHICLE FOR RESEARCH EXPERIMENTS

DISCOVERER RESEARCH PROGRAM

RE-SEARCH RE-ENTRY VEHICLE

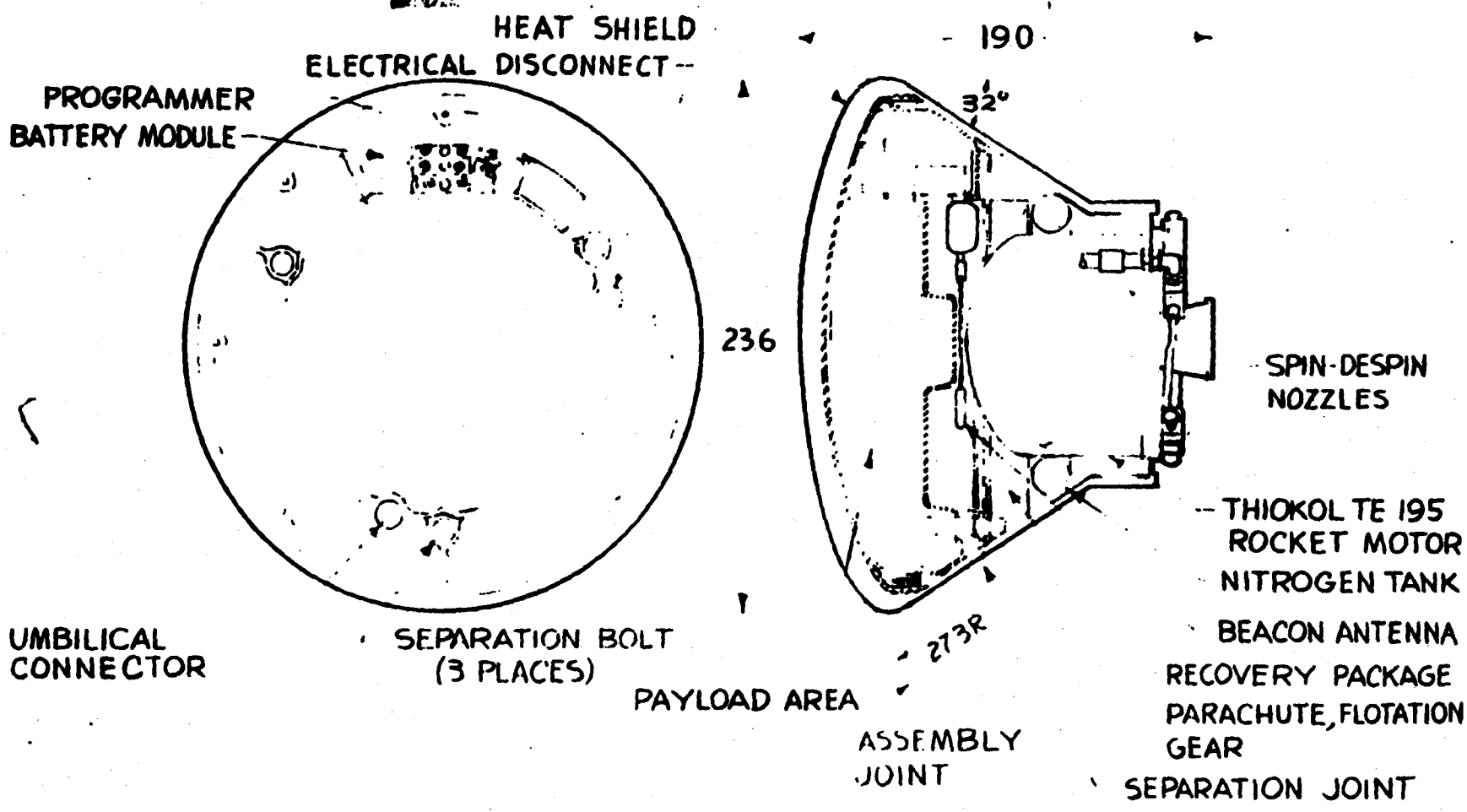

SCOVERER RESEARCH PROGRAM

ALTERNATE STOWAGE CONCEPT OF RE-ENTRY RESEARCH VEHICLES

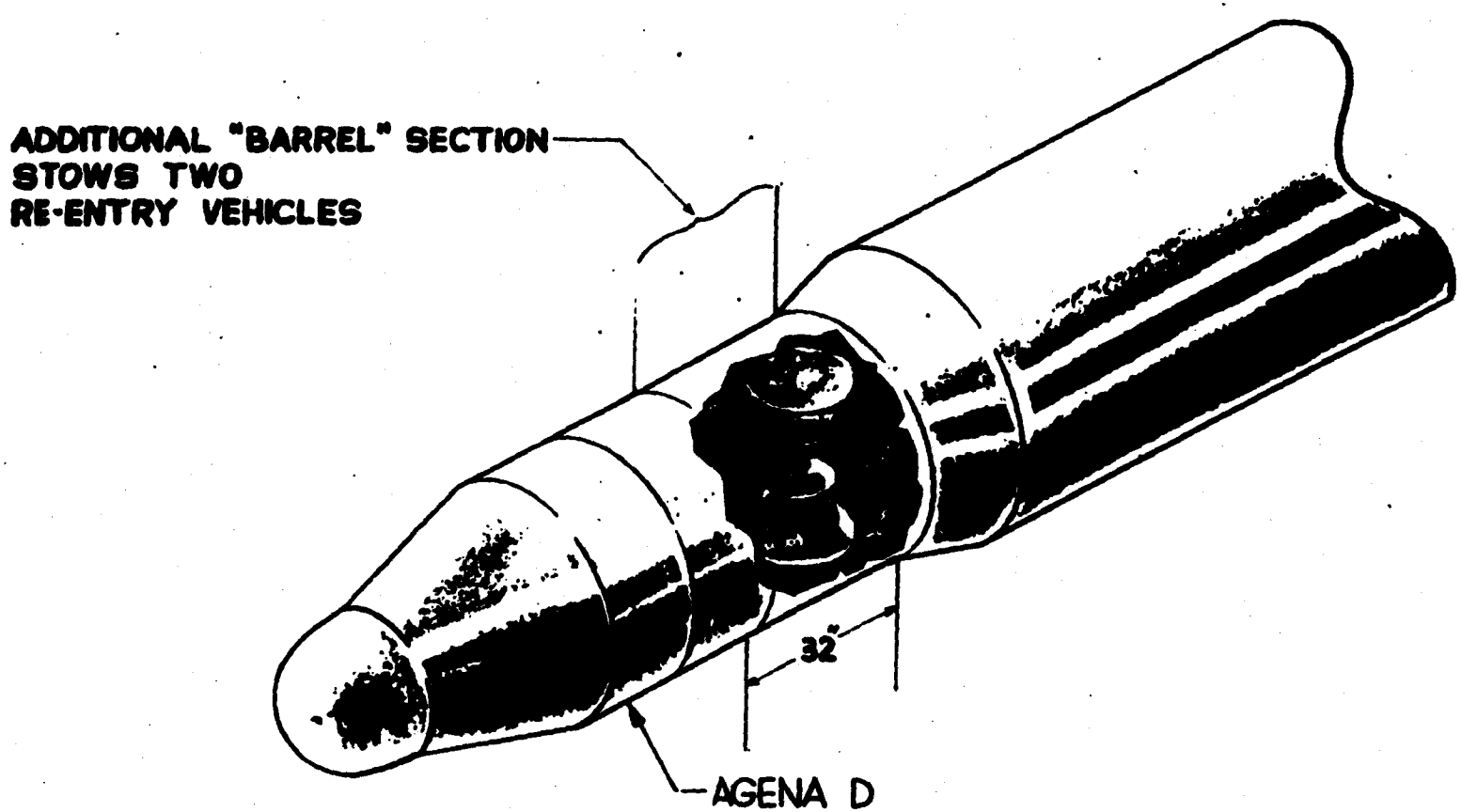

P-0467 'USC' 2-11-62

SOLAR REFLECTOR SYSTEM INSTALLATION

DISCOVERER

NOTE:

1. TEST OBJECTIVE: DETERMINE THE DELETERIOUS EFFECTS OF SPACE ENVIRONMENT ON SOLAR REFLECTORS.
2. OPERATION
   - A. REFLECTOR DEPLOYED ON ORBIT
   - B. VEH. RESTABILIZED & MAINTAINED ACTIVE FOR AS MANY ORBITS AS POSSIBLE TO PROVIDE SUN ORIENTATION TESTS
   - C. TUMBLING VEH. PROVIDES USEFUL TEST DATA THRU LINK IV FOR AN ADDITIONAL 24 DAYS MINIMUM
3. SOLAR REFLECTOR WEIGHT - 65 POUNDS
4. TELEMETER SYS. (LINK IV) WEIGHT 14 POUNDS
   - A. TAPE RECORDER (27:1 RATIO; 180 MIN R/1)
   - B. TRANSMITTER-VHF
   - C. POWER SUPPLY (DC-DC CONVERTER)
   - D. VOLTAGE CONTROL OSCILLATOR
   - E. COMMUTATOR (.1 X 60)
   - F. PRE-AMP
   - G. COMMAND RECEIVER

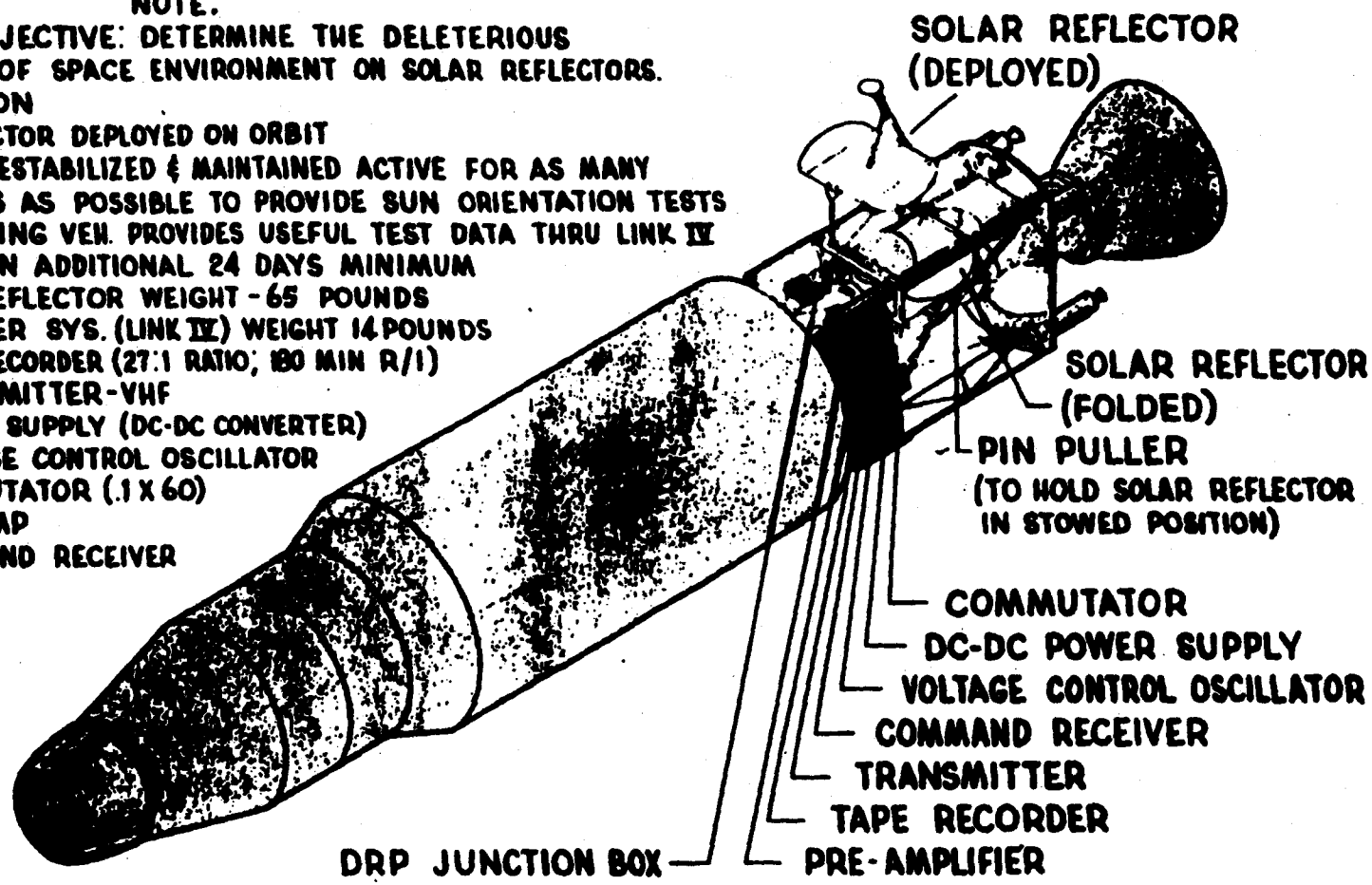

[redacted] DISCOVERER RESEARCH PROGRAM

EJECTION OF COMMUNICATION PACKAGE

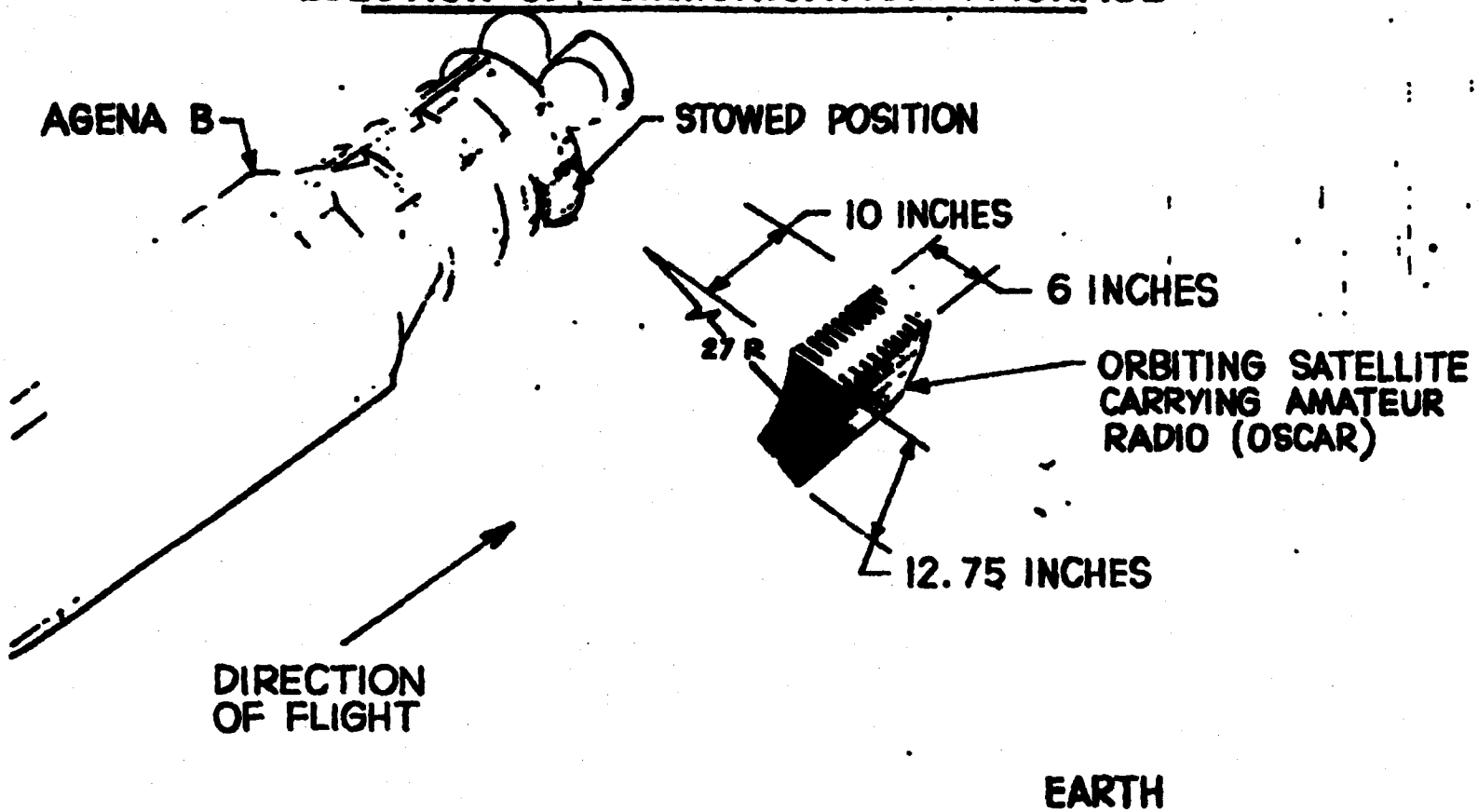

DISCOVERER RESEARCH PROGRAM

PROPOSED GEOPHYSICAL EXPERIMENTS

	FTV NUMBER	1124	1125	1126	1132	1127	1128	1134	1129	1130	1131	1133	1135	1136
	POOR NUMBER	112	113	114	115	116	117	118	119	120	121	122	123	124
1	EROISON DETECTOR	✓	✓											
1	IMPEDANCE PROBE 1A	✓	✓							✓	✓			
	TEMP. COMMUTATOR	✓	✓					✓	✓	✓	✓			VELA HOTEL
2	COSMIC RAY MON. 7B	✓	✓											
1	DENSITY GAGE MOD 3A	✓	✓											
3	RADIOMETER, MODEL 4	✓	✓											
3	RADIOMETER, MODEL 5	✓	✓											
1	CHARGED PARTICLE ENERGY	✓	✓											
4	COSMIC RAY MONITOR 8B	✓	✓							✓	✓	✓		
2	GALACTIC RF MON, 3													
1	ELECTRON DENSITY GAGE 2C													
3	ULTRA VIOLET RADIOMETER													
2	GALACTIC RF MON 2													
	RETARD POTENT. ANALYZER													
1	ION TRAP													
	BETA-GAMMA DETECTOR													
	TISSUE EQUIVALENT CHAMBER													
2	IMPEDANCE PROBE 2													
1	MAGNETOMETER													
2	20/40 TRANSMITTER													
	NEUTRON DETECTOR 3													
	MASS SPECTROMETER													
	RADIOMETER, MODEL 6													
	MICROMETEORITE DETECTOR, GRID-ACOUSTIC													

1 EXPERIMENT MOUNTED ON ERECTABLE BOOM . TWO TAPE ANTENNAE REQUIRED . SENSORS FACING EARTH
. SENSOR FACING ZENITH

P 6462 DISC 2/10/62

DISCOVERER RESEARCH PROGRAM

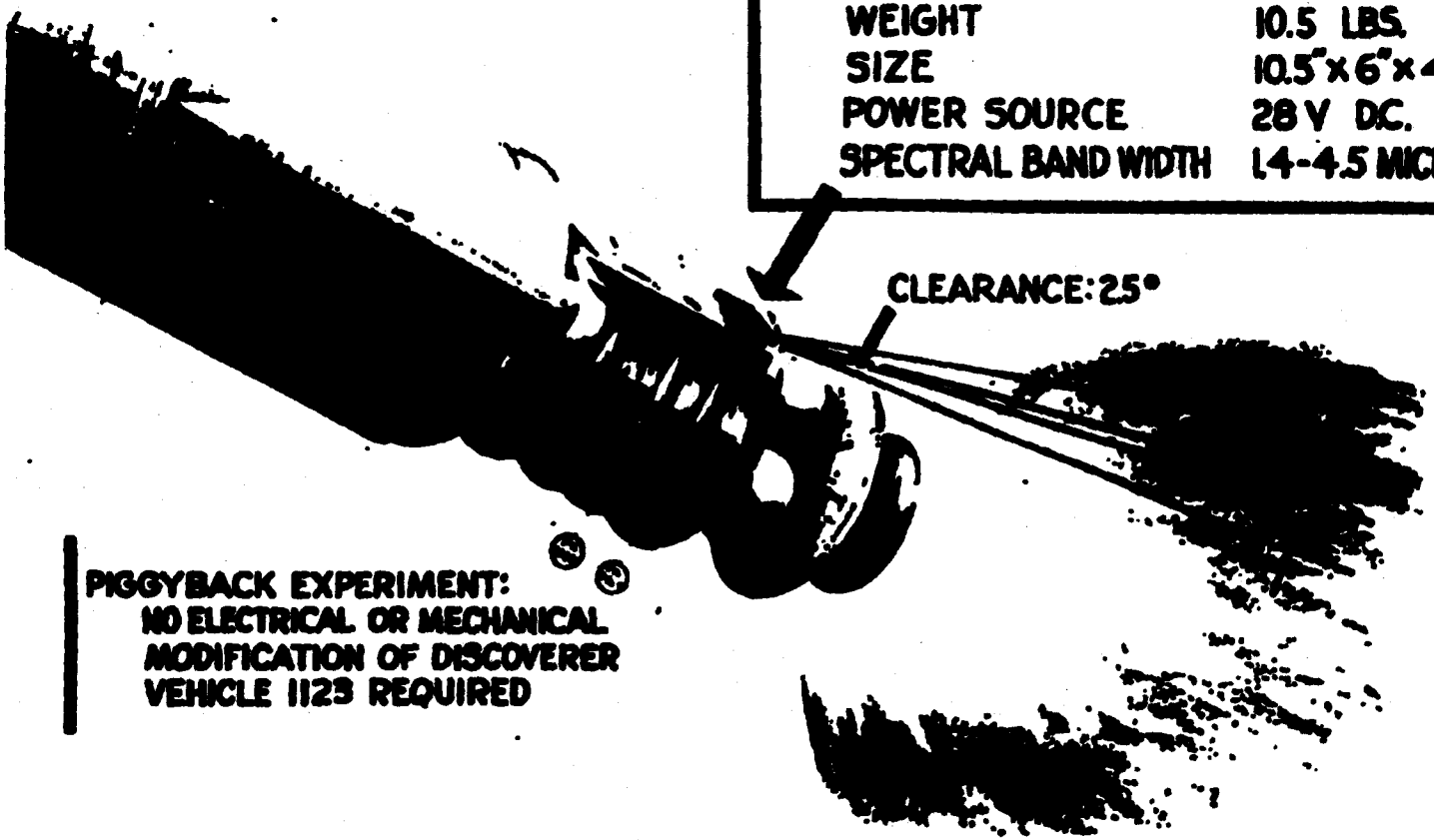

UNCLASSIFIED

DISCOVERER RESEARCH PROGRAM

THERMOELECTRIC BOOM

NOTES

1 TEST OBJECTIVE: DETERMINE THE OPERATING CHARACTERISTICS OF A THERMOELECTRIC GENERATOR IN SPACE ENVIRONMENT

2 OPERATION
- A THERMOELECTRIC GENERATOR EXTEND IN PLACE AFTER VEHICLE PLACED IN ORBIT
- B ACTIVE LIFE OF THERMAL ELECTRIC GENERATOR SYSTEM 4 DAYS

3 THERMAL ELECTRIC BOOM WEIGHT 5.0 LBS

4 TELEMETRY SYS, LINK II (WEIGHT 24 LBS)
- A TAPE RECORDER
- B COMMUTATOR
- C TM DEV
- D DEP SWITCH DEV
- E DEP JUNCTION BOX

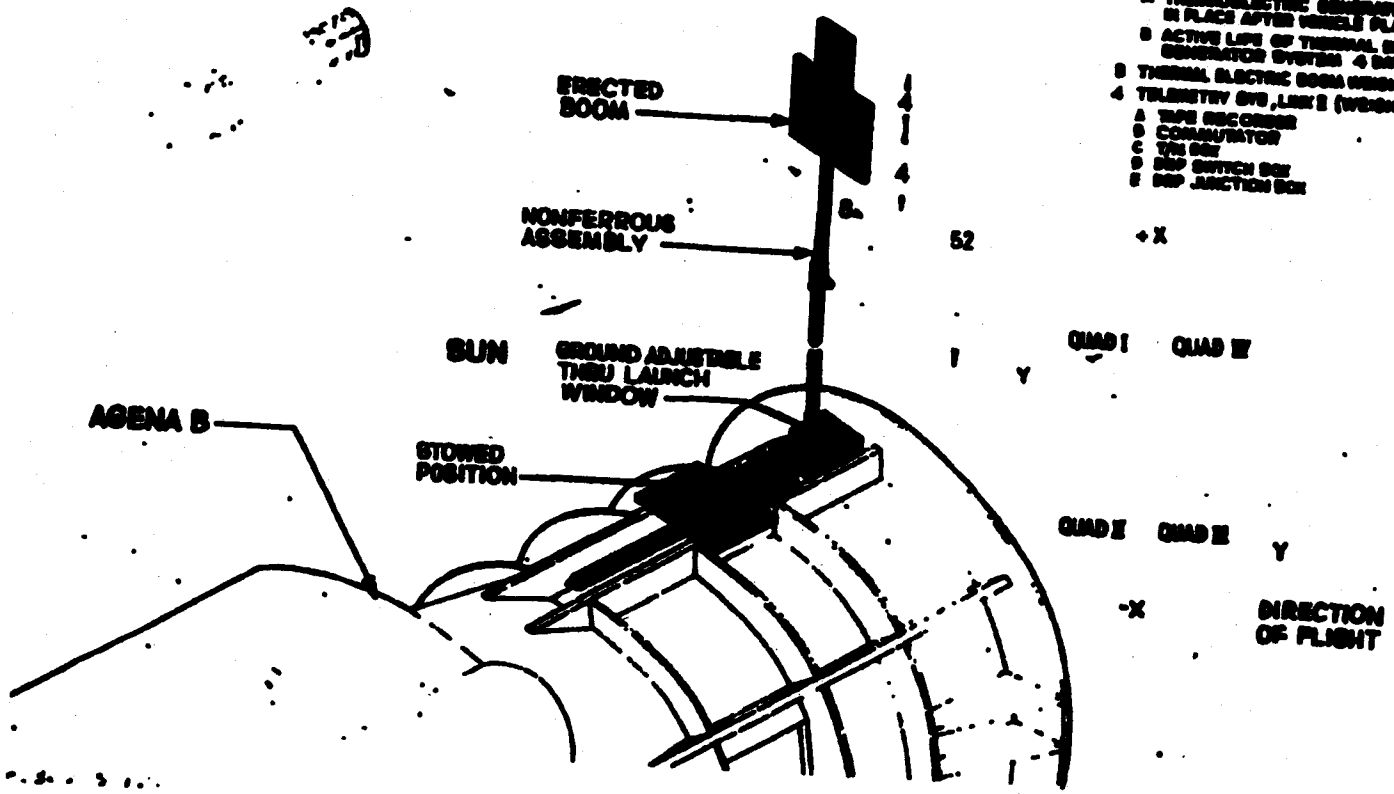

UNCLASSIFIED

DISCOVERER RESEARCH PROGRAM

HORIZON SENSOR EXPERIMENT

OBJECTIVES:

TO EVALUATE THE PERFORMANCE OF A HORIZON SENSOR FOR CONTROL OF VEHICLE ORIENTATION

EQUIPMENT:

2 HORIZON SCANNERS
1 MIXER BOX
1 PRE-AMP BOX
TOTAL EQUIP. WT. 13.5 LBS.

TELEMETRY:

7 INSTRUMENTATION POINTS WITH 2 ON CONT CH
REAL TIME DATA VIA LINK II T/M
POWER REQUIREMENTS, 12 WATTS

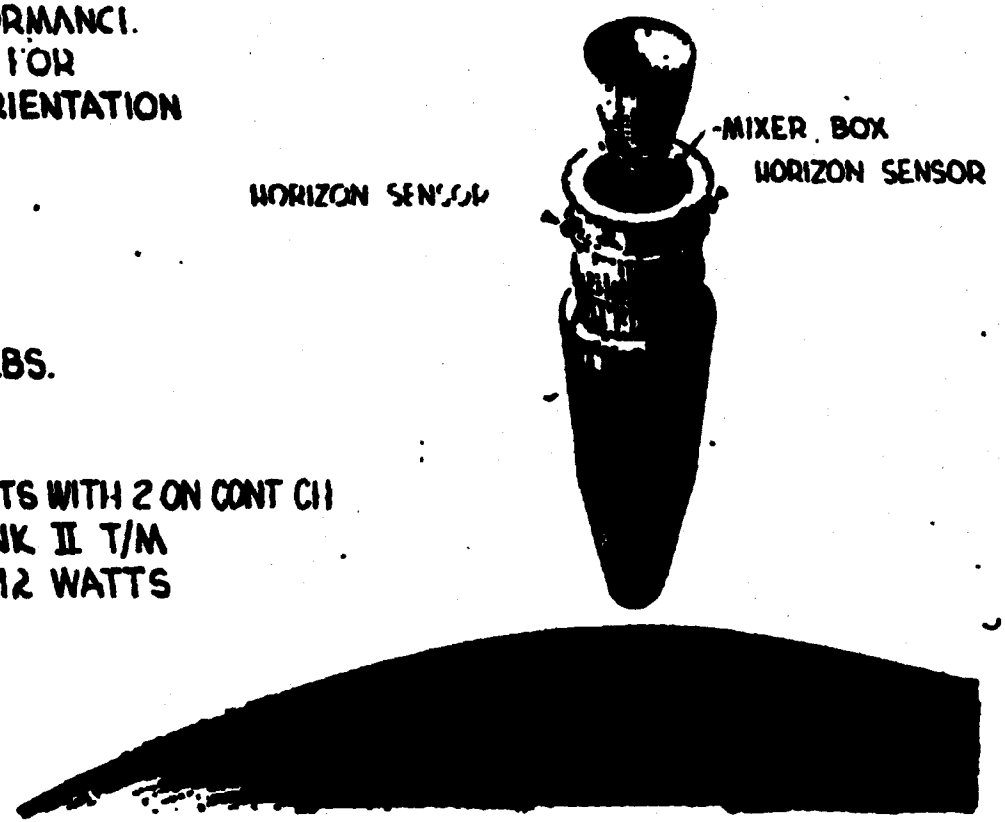

1-6460 MSC 3-10-62
CPS 1

DISCOVERER RESEARCH PROGRAM

ULTRA VIOLET RADIOMETER EXPERIMENT

OBJECTIVE:
TO DETERMINE THE OZONE DISTRIBUTION AS A FUNCTION OF ALTITUDE

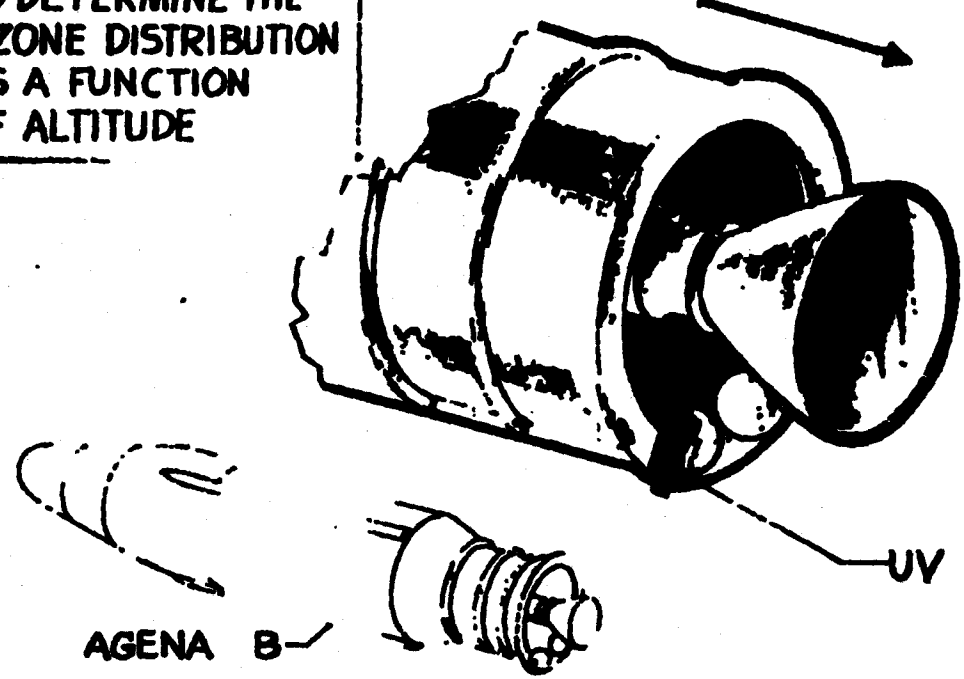

COMMUNICATIONS:
- 4 INSTRUMENTATION POINTS
- REAL TIME DATA VIA LINK II T/M
- RECORDED DATA ON DUAL TRACK 180 MIL TAPE RECORDER (27:1 RATIO).

UNCLASSIFIED

DISCOVERER RECOVERY CAPSULE

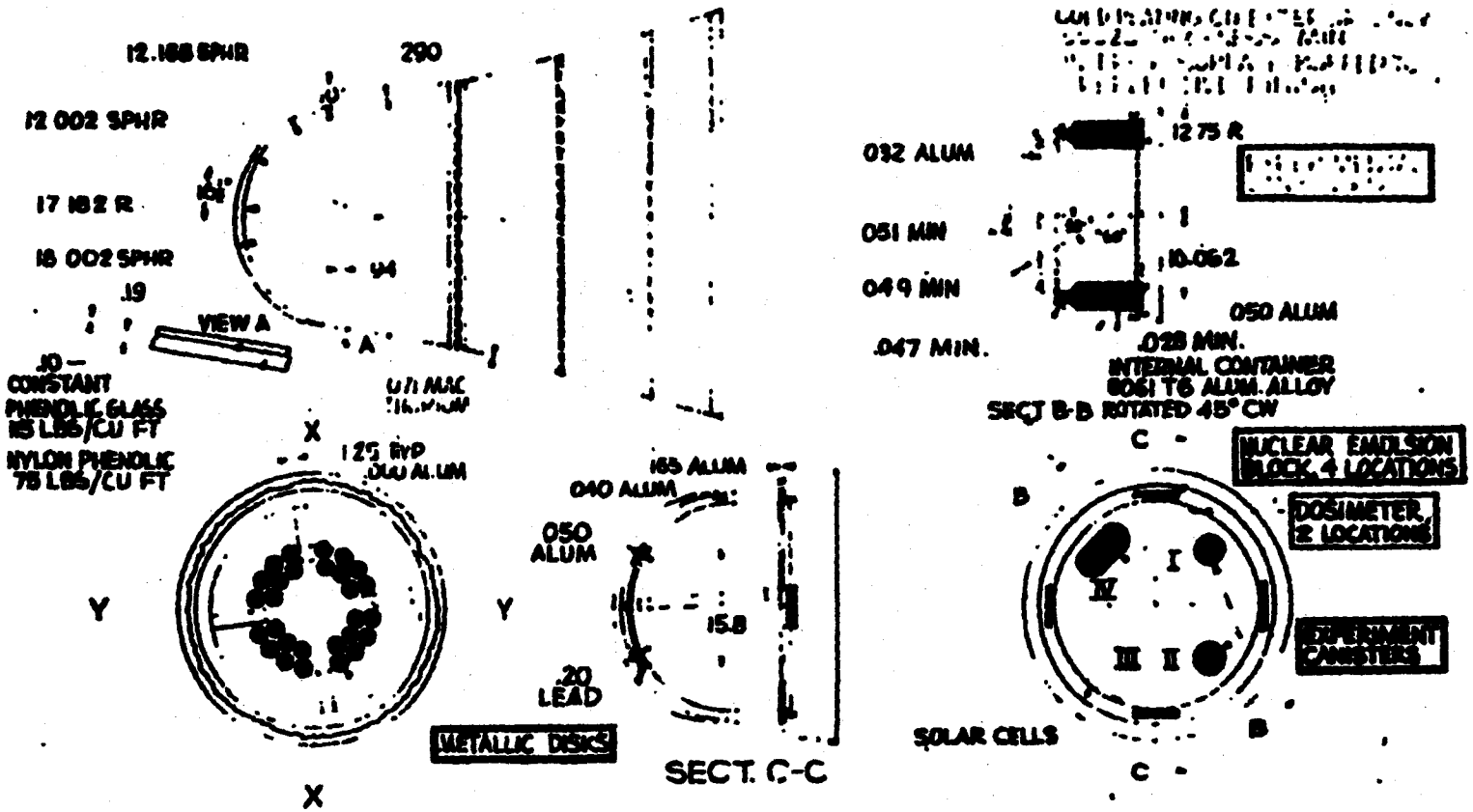

UNCLASSIFIED

K-6083 "DISC" 12/6/61
CY-5-1

DISCOVERER RESEARCH PROGRAM

RADIOMETER TEST

OBJECTIVE:

TO MEASURE BACKGROUND RADIATION IN SUPPORT OF MIDAS PROGRAM.

NOTES:

1. RADIOMETER ASSY. WT. 50 LBS.
2. DATA FROM THE TEST WILL BE OBTAINED VIA LINK II FM/FM T/M SYSTEM.

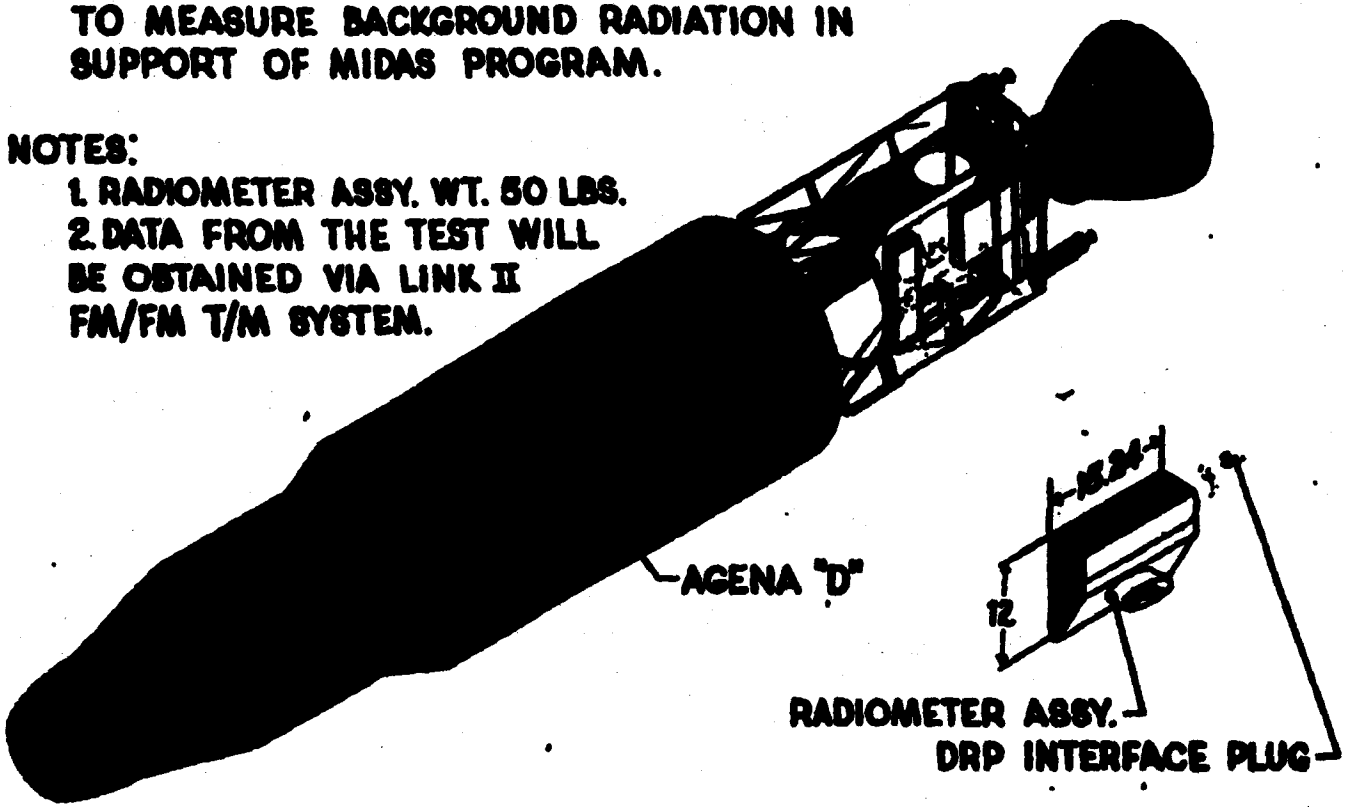

[redacted]COVERER RESEARCH PROGRAM[redacted]

RECESSED & LARGE DOOR MODULES

NOTES:
- TEST OBJECTIVES: TO PROVIDE A BASIC CAPABILITY FOR CONDUCTING SPACE ENVIRONMENT AND MATERIAL EXPERIMENTS
- MODULE WEIGHT
  - LARGE DOOR WITH BASIC EQUIP. - 95 LBS
  - RECESSED DOOR, VARIABLE
- ACTIVE LIFE OF MODULES - 4 DAYS
- BASIC EQUIP ON LARGE DOOR MODULE
  - TAPE RECORDER
  - PROGRAMMER
  - TWO COMMUTATORS
  - TIME REFERENCE GENERATOR
  - D.C. D.C. POWER SUPPLY

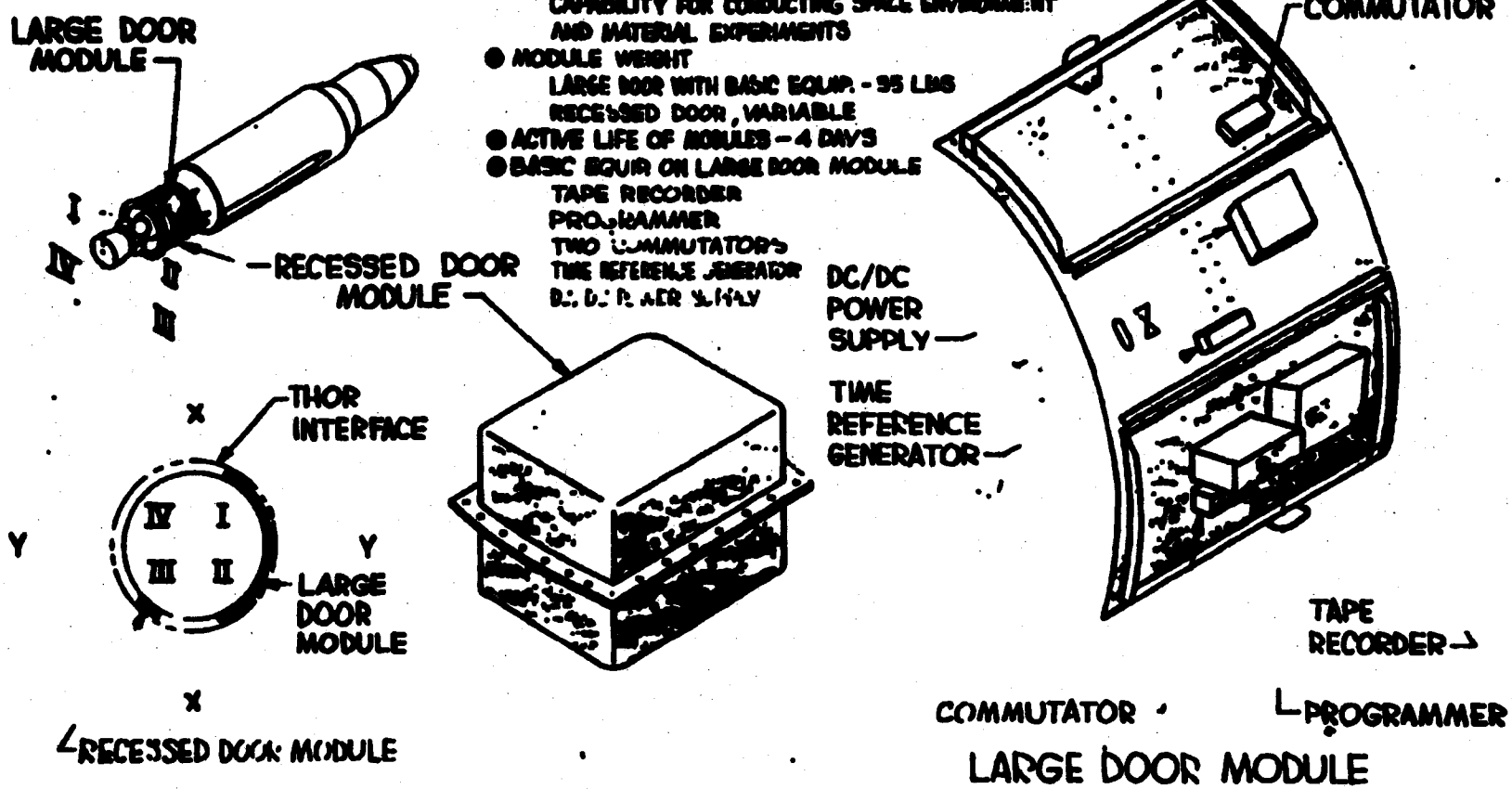

UNCLASSIFIED

DISCOVERER RESEARCH PROGRAM

RE-ENTRY RESEARCH VEHICLE

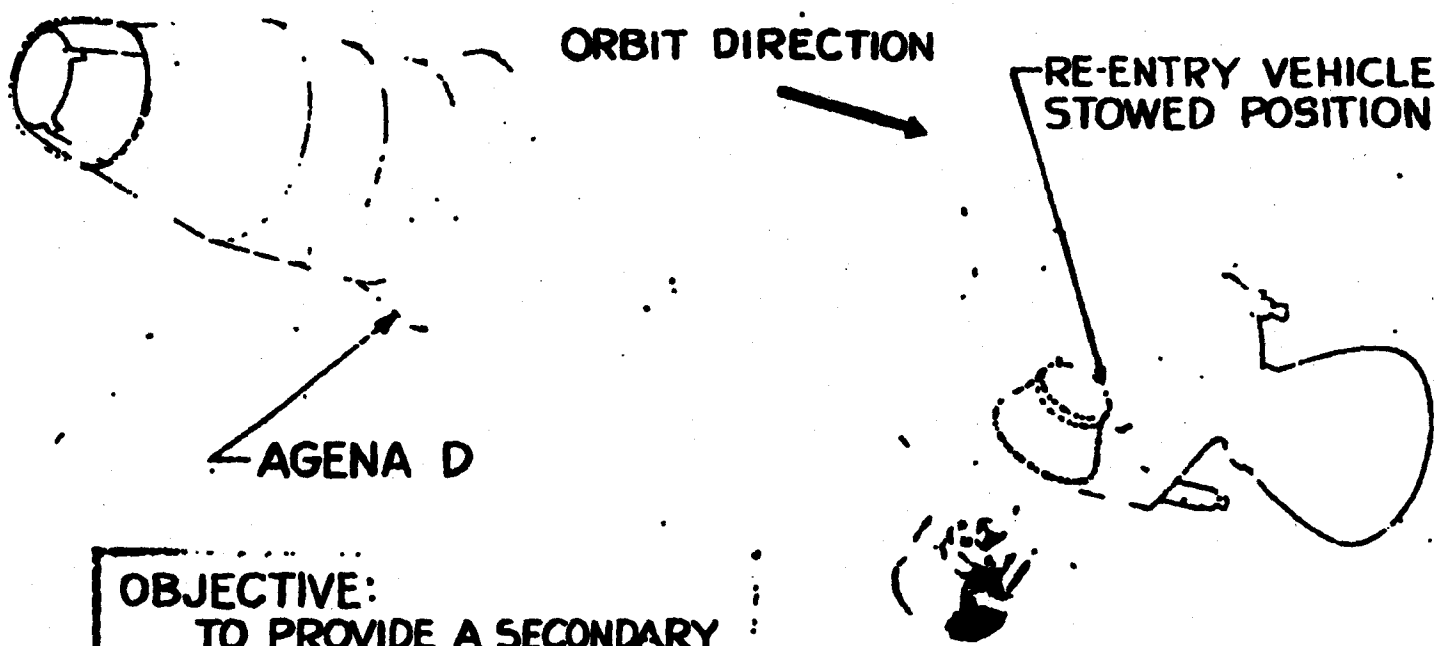

OBJECTIVE:
TO PROVIDE A SECONDARY RE-ENTRY VEHICLE FOR RESEARCH EXPERIMENTS

[redacted] DISCOVERER RESEARCH PROGRAM

RE-SEARCH RE-ENTRY VEHICLE

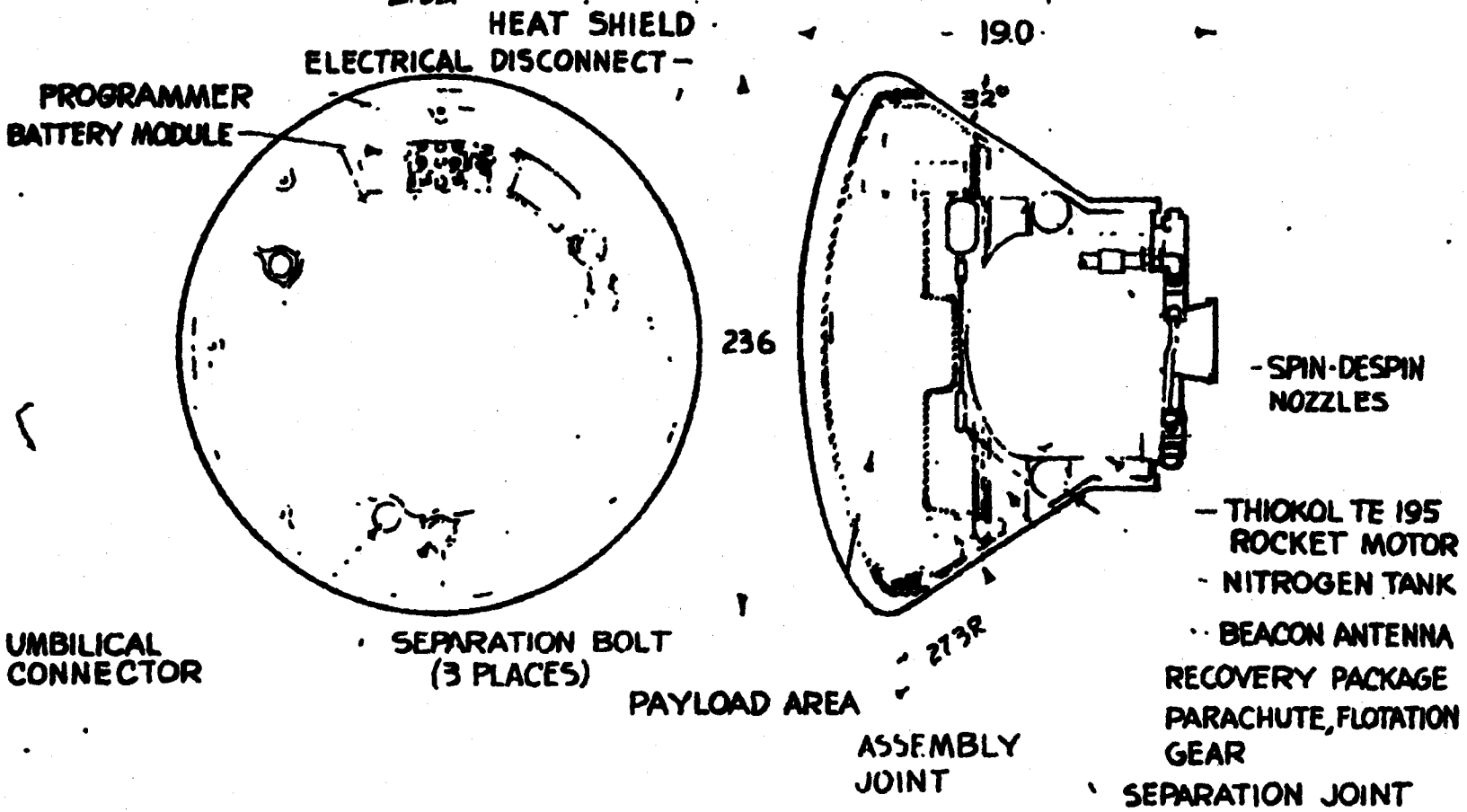

[redacted]VERER RESEARCH PROGRAM[redacted]

ALTERNATE STOWAGE CONCEPT OF RE-ENTRY RESEARCH VEHICLES

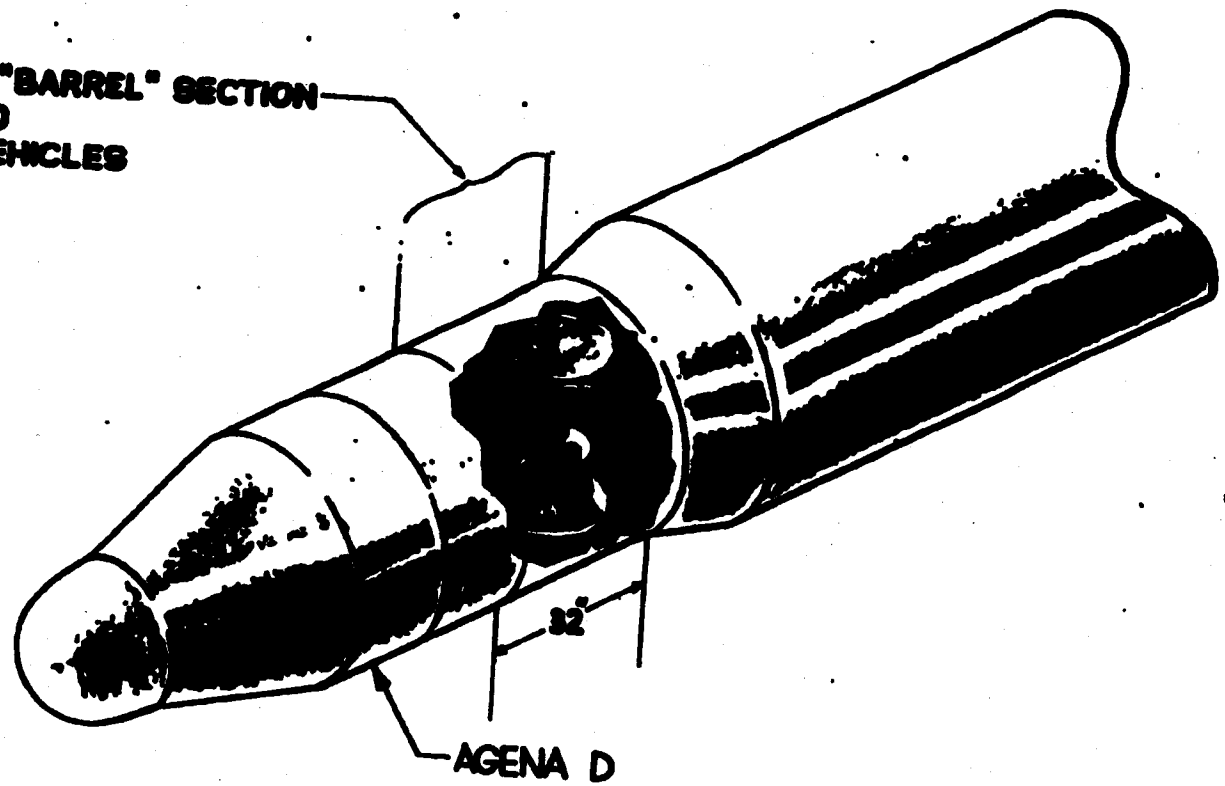

SOLAR REFLECTOR SYSTEM INSTALLATION

DISCOVERER

NOTE:
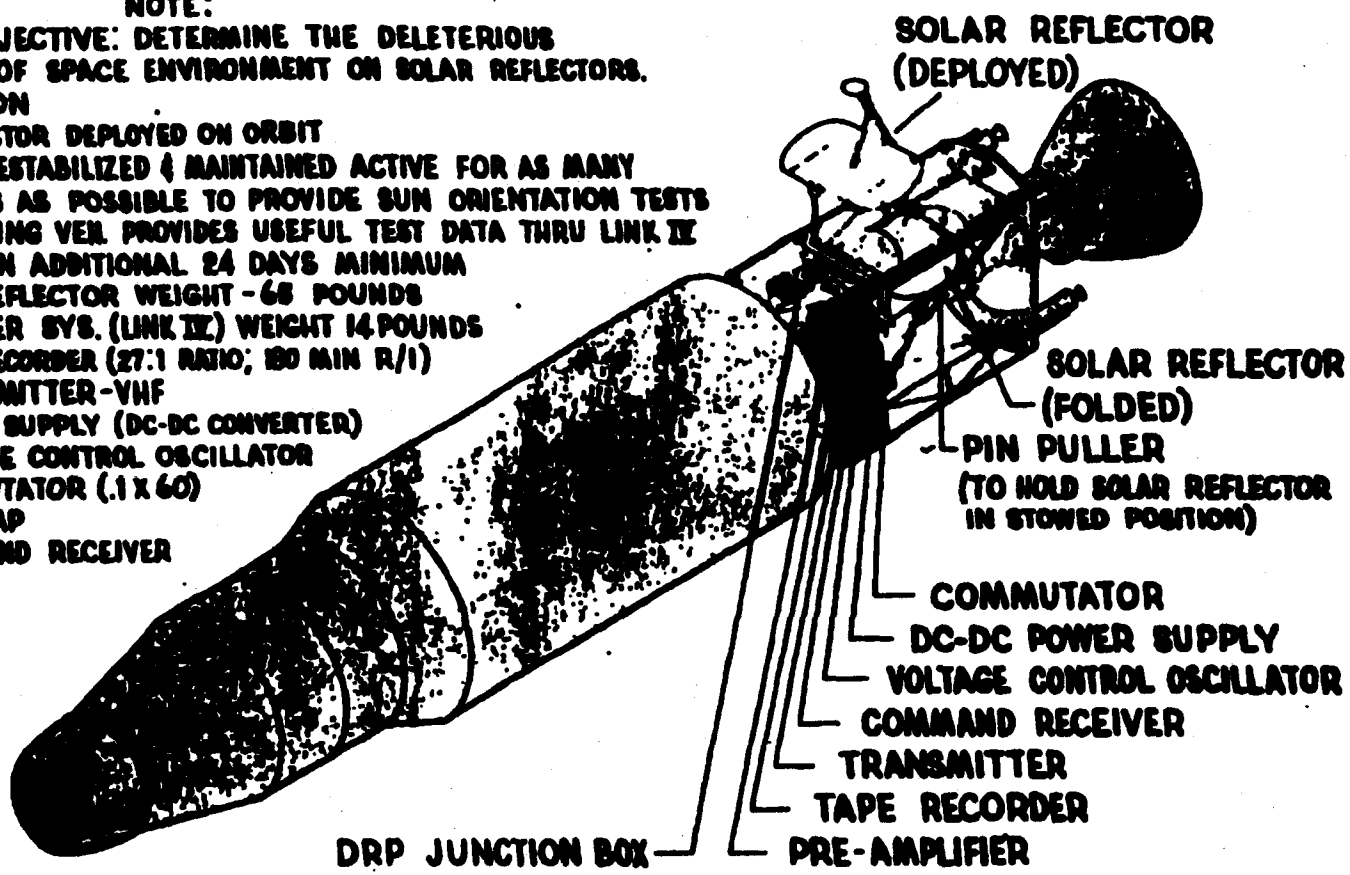
1. TEST OBJECTIVE: DETERMINE THE DELETERIOUS EFFECTS OF SPACE ENVIRONMENT ON SOLAR REFLECTORS.
2. OPERATION
   - A. REFLECTOR DEPLOYED ON ORBIT
   - B. VEH. RESTABILIZED & MAINTAINED ACTIVE FOR AS MANY ORBITS AS POSSIBLE TO PROVIDE SUN ORIENTATION TESTS
   - C. TUMBLING VEH. PROVIDES USEFUL TEST DATA THRU LINK IV FOR AN ADDITIONAL 24 DAYS MINIMUM
3. SOLAR REFLECTOR WEIGHT - 68 POUNDS
4. TELEMETER SYS. (LINK IV) WEIGHT 14 POUNDS
   - A. TAPE RECORDER (27:1 RATIO; 180 MIN R/I)
   - B. TRANSMITTER-VHF
   - C. POWER SUPPLY (DC-DC CONVERTER)
   - D. VOLTAGE CONTROL OSCILLATOR
   - E. COMMUTATOR (.1 X 60)
   - F. PRE-AMP
   - G. COMMAND RECEIVER