[redacted]

COPY NO 29

(U) LAND RECOVERY IMPLEMENTATION PLAN

15 JANUARY 1963

PREPARED BY

LAND RECOVERY IMPLEMENTATION PLANNING GROUP

PLN 19

HEADQUARTERS
SPACE SYSTEMS DIVISION
AIR FORCE SYSTEMS COMMAND
UNITED STATES AIR FORCE

DOWNGRADED AT 3 YEAR INTERVALS;
DECLASSIFIED AFTER 12 YEARS.
DOD DIR 5200.10

01048463

[redacted]

SSOR-229

[redacted]

(U) LAND RECOVERY IMPLEMENTATION PLAN

15 JANUARY 1963

PREPARED BY

LAND RECOVERY IMPLEMENTATION PLANNING GROUP

DOWNGRADED AT 12 YEAR INTERVALS;
NOT AUTOMATICALLY DECLASSIFIED.
DOD DIR 5200.10

Headquarters
SPACE SYSTEMS DIVISION
Air Force Systems Command
United States Air Force

[redacted]

SSOR-229

This document contains information affecting the national defense of the United States within the meaning of the Espionage Laws, Title 18, U.S.C., Sections 793 and 794. The transmission or revelation of which in any manner to an unauthorized person is prohibited by law.

FOREWORD

This plan, initiated by General Bernard A. Schriever in October, 1962, describes the objectives, developmental requirements and application of resources to provide an operational Land Recovery System for ballistic and lifting re-entry vehicles terminating flight within the Continental United States.

The study, "Recovery of Space Vehicles Within the Continental United States," dated 1 June 1962, was used as the basic document and guide for this implementation plan.

The group which participated in full-time efforts on this plan consisted of the following:

Lt Col Leo J. Foster, Jr., SSD (SSOR), Chairman
Lt Col Edwin Lasch, 6594 Aerospace Test Wing
Mr. Anthony P. Trunfio, ESD
Maj Lawrence Politzer, ESD
Maj Roger Bracken, AFMDC
Maj Robert Goons, ASD
Maj George Patterson, AFFTC
Capt Arden Lawrence, APGC
Capt Robert H. Krumpe, SSD (SSOR)

In addition, the following persons provided services on part-time participation with the group:

Col Rudolph Koller, 6594 Aerospace Test Wing
Col Clay Tice, Jr., AFFTC
Lt Col George W. Derby, APGC
Maj Donald C. Bennett, SSD (SSNP)
Maj Robert E. Anglim, SSD (SSOQ)
Lt Joe Binsack, SSD (SSOC)
Maj Arthur Mulanax, SSD (SSSS)
Maj Norman Beaulieu, 6594 Aerospace Test Wing
Maj Arthur Grafe, 6594 Aerospace Test Wing
Mr. R. J. Harer, AFFTC
Mr. Orvie Steele, AFMDC
Capt. William Seymour, AFMDC

Many other individuals from every Center and Division within the AFSC contributed valuable time and support in the form of engineering and research services to complete this plan.

Leo J. Foster, Jr.
Lt Col, USAF

TABLE OF CONTENTS

Section		Page
I.	SUMMARY	1-1
II.	INTRODUCTION	2-1
III.	LAND RECOVERY CONTROL CONCEPT	3-1
IV.	SYSTEM CONFIGURATION	4-1
V.	LOGISTICS AND RESOURCES	5-1
VI.	DEVELOPMENT PROGRAM IMPLEMENTATION	6-1
VII.	FINANCIAL	7-1

Appendix		
A.	TYPICAL TELEMETRY STATION	A-1
B.	AIRBORNE INSTRUMENTATION PLATFORM	B-1

LIST OF TABLES

Number	Title	Page
4-1.	Airborne Retrieval Aircraft Characteristics	4-11
4-2.	Ballistic Vehicle Recovery Communications	4-21
4-3.	Lifting Vehicle Recovery Communications	4-24
5-1.	Edwards Facilities and Schedules	5-5
5-2.	Prince Albert Facilities and Schedules	5-6
5-3.	Darwin, Australia Facilities and Schedules	5-7
5-4.	Midway Island Facilities and Schedules	5-8
5-5.	Manpower Requirements	5-9
6-1.	Land Recovery - Major Actions and Facilities	6-6
6-2.	Development Milestones	6-7
7-1.	Funding Requirements	7-2
7-2.	Total Costs (including alternates)	7-3

LIST OF ILLUSTRATIONS

Number	Title	Page
4-1.	System Configuration	4-2
4-2.	Re-Entry Profile	4-4
4-3.	Ballistic Trajectory Track	4-5
4-4.	ROC Block Diagram	4-12
4-5.	RCC Block Diagram	4-15
4-6.	Land Recovery Ballistic Vehicle Network	4-19
4-7.	North-South Recovery Link Requirements	4-20
4-8.	West-East Recovery Link Requirements	4-23
5-1.	RCC Floor Plan	5-2
A-1.	Typical Telemetry Station	A-2

DEFINITIONS

Ballistic	Lift/Drag = 0
Deorbit	The point in the trajectory at which retrothrust is applied.
Lifting	Lift/Drag > 0
Mission Control Center	The responsible agency for the overall test mission. This term is synonymous with Flight Test Control Center (FTCC).
Recovery	That phase of the total mission which originates at deorbit and continues through retrieval.
Recovery Control	The control required to effect the safe delivery of a space vehicle from deorbit to a desired point on earth.
Recovery System Complex	The three specific recovery areas and personnel, facilities, and equipment located therein, required for recovery.
Retrieval	Those actions which are taken just prior to, during and after landing/impact to complete the recovery phase.

ABBREVIATIONS

CONUS	Continental United States
EMC	Engineered Military Circuit
MCC	Mission Control Center
RCC	Recovery Control Center
ROC	Retrieval Operations Center
SPO	System Program Office
STC	Satellite Test Center

SECTION I

SUMMARY

The land recovery of space vehicles within the continental United States requires an organization with facilities and forces capable of recovering and retrieving ballistic and lifting re-entry systems. These vehicles will be controlled so as to approach the designated recovery sites through specified re-entry corridors and/or windows.

To insure that the land recovery capability will be compatible with the recovery requirements of all agencies, the Recovery Control Center will be configured to receive information and data required to accomplish recovery. Using this information the RCC will, when applicable, provide advisory/command control of de-orbited vehicles and will position and control the recovery forces required to insure recovery/retrieval of any given vehicle. All required data gathering instrumentation external to the recovery system complex will be provided by existing world, national, or service ranges/control facilities or will be furnished as unique program equipment by the applicable system program office.

This plan provides the necessary guidance for integration of existing and programmed equipment, procure new equipment and facilities where required, and specifies manning and training requirements to provide an operational land recovery complex. Nine months from approval date of this plan, a limited capability for ballistic vehicles can be operationally ready. Eighteen months from approval date of this plan, a limited capability for lifting vehicles can be operationally ready. Edwards AFB and Holloman AFB have an existing capability to support the NASA Gemini Program as a

THIS PAGE IS UNCLASSIFIED

This document contains information affecting the national defense of the United States within the meaning of the Espionage Laws, Title 18 U.S.C., Sections 793 and 794, the transmission or revelation of which in any manner to an unauthorized person is prohibited by law.

retrieval site. A fully operational capability is planned for 4th quarter CY 65 if program approval is received prior to 1 July 1963.

Maximum use of compatible existing and programmed equipment within AFSC inventories was considered. The gross estimate required to establish a minimum capability for high inclination ballastic vehicles will be approximately $665,000.00. Expenditures in the order of $ 319,000.00 are required to implement a minimum capability to support low inclination semi-ballistic and lifting space vehicles. The overall total estimate is $ 984,000.00. This overall cost includes the procurement of new equipment and the physical relocation of existing equipment required at a new location. If programmed requirements deny the use and/or relocation of existing equipment the cost noted above will increase.

Timely attention is required to effect an operational system by 4th quarter CY 65. Long lead time construction utilizing MCP funds requires that this plan receive approval prior to 1 July 1963.

SECTION II

INTRODUCTION

The Planning Group was formed to prepare an implementation plan based upon the study document "Recovery of Space Vehicles Within the Continental United States", (Branch Report) dated 1 June 1962. Some members of the Planning Group also participated in the development of the study document. This Planning Group met at intervals during the period 9 Nov 1962 through 15 January 1963.

The implementation plan is based on ballistic vehicles from high inclination orbits with high re-entry angles and lifting vehicles with low inclination orbits and low re-entry angles. Specific recovery requirements and constraints were imposed. A concept of operation as exercised by the Recovery Control Center and its interface with any Mission Control Center was developed. The capability to support NASA programs was considered.

The overall Recovery System configuration is based on a maximum utilization of existing and programmed resources within the AFSC and National Ranges. A Survey of Existing and Programmed Equipment document was prepared and extensively used by the Planning Group. Copies of this document are available at SSD (SSOR).

The funds required to support this system are appropriately identified. A "buy or relocate" was considered for each necessary item and the overall costs include the least expensive choice. These funds do not include costs which would be incurred if relocation of available equipment is denied.

SECTION III

LAND RECOVERY CONTROL CONCEPT

3.1 MISSION.

The implementation of a land recovery capability in the continental United States is based on the following mission:

3.1.1 Develop a recovery control capability to satisfy the requirements of ballistic and lifting re-entry systems which are scheduled for recovery in the area of any of the three land recovery sites.

3.1.2 Organize and direct retrieval forces to acquire, chase, retrieve and return recovered space vehicles to a desired base within the recovery complex.

3.1.3 Provide command advisory control of piloted lifting vehicles from deorbit to landing.

3.1.4 Provide inter-agency coordination (FAA, etc), recovery safety and emergency plans for the recovery complex.

3.2 SYSTEM REQUIREMENTS AND CONSTRAINTS.

The information presented in this section represents the assumptions and constraints that are considered necessary to develop a plan for the land recovery/retrieval of space vehicles.

3.2.1 Assumptions.

3.2.1.1 The 1963-1970 time period is the period of consideration.

3.2.1.2 Land recovery/retrieval of recoverable space vehicles is to be accomplished within the complex of the following three sites:

Edwards Air Force Base, California
Wendover Bombing and Gunnery Range, Utah
Holloman Air Force Base, New Mexico

...defense of the United States within the meaning of the Espionage Laws ... of which in any manner to an unauthorized person is prohibited by law.

The fact that the selected sites form a geographical triangle should not be interpreted to mean that the entire area is to be considered as a landing area; rather, each site will perform a specific function in recovery operations depending upon the type of vehicle to be recovered. Specifically, low inclination vehicles will land in the areas of Edwards Air Force Base and Holloman Air Force Base. Recovery of high inclination orbiting ballistic vehicles will be accomplished in the Wendover area.

3.2.1.3 High inclination vehicles will be recovered on North to South trajectories with true azimuths from Wendover between 340° and 020°. Vehicles will be recovered on South to North trajectories with true azimuths from Wendover between 160° and 200°.

3.2.1.4 Low inclination vehicles will be recovered from trajectories that will bring them within radar range of Hawaii/Midway.

3.2.1.5 Existing and programmed instrumentation and equipment and relocation of Air Force Systems Command resources will be utilized to the maximum extent possible.

3.2.1.6 Scheduled use of additional resources from other United States Air Force Commands, other branches of the Department of Defense, and other Governmental Agencies (i.e., FAA, NASA) are considered available to support the recovery effort.

3.2.1.7 Where required, the necessary diplomatic negotiations with foreign governments for the installation of pertinent equipment, and/or the overfly of the territory by tracking aircraft, and/or the placement of other than indigenous personnel at the foreign sites, will be accomplished by the responsible government agency.

3.2.1.8 A Recovery Control Center (RCC) for controlling the recovery/retrieval efforts will be located at Edwards Air Force Base.

3.2.1.9 The RCC will be configured to support the recovery requirements of various mission agencies (Air Force, NASA and Industry).

3.2.1.10 The RCC will exercise command and control from deorbit of the recoverable vehicle.

...defense of the United States within the meaning of the Espionage Laws ... which in any manner to an unauthorized person is prohibited by law.

3.2.1.11 The RCC Commander will have operational control of the retrieval forces to the extent necessary to perform the mission.

3.2.1.12 Initially, emphasis will be placed on recovery/retrieval of high inclination ballistic re-entry vehicles that can utilize aerial recovery, on impact landings within the Wendover area. However, to meet the X-20 time schedule, special emphasis should be placed on acquiring and installing the necessary instrumentation to accomplish recovery/retrieval of lifting space vehicles at the Edwards and Holloman areas.

3.2.1.13 A retrieval capability for semi-ballistic vehicles, such as Gemini, presently exists in the Edwards and Holloman areas.

3.2.2 Limitations.

3.2.2.1 Although the capability to recover more than one vehicle within a short period of time is an ultimate goal, initially, the recovery complex will have a capability for not more than one operation during any one day.

3.2.2.2 This plan considers only the recovery of vehicles in the planned recovery area.

3.2.2.3 Because some of the recoveries to be accomplished in the land area of the United States are of a military nature, certain political complications can be of major importance. The re-entry corridors leading to the selected recovery areas are located over the Pacific Ocean, Mexico and Canada and may present certain problems, some of which are:

Permission to locate instrumentation within the country concerned.

Permission to fly instrumented aircraft over the country concerned.

Placement of other than indigenous personnel at the necessary sites to facilitate closer control and crypto security if necessary.

3.2.2.4 Instrumentation external to the recovery/retrieval complex will be provided by existing world, national or services ranges/control facility or will be furnished as unique program equipment by the applicable System Program Office.

...defense of the United States within the meaning of the Espionage Laws ... which in any manner to an unauthorized person is prohibited by law.

3.3 OPERATIONAL CONCEPT

3.3.1 In the event of a ballistic recovery at Wendover, the RCC will maintain control over the land and airborne forces deployed in the area through the microwave communications system interconnecting Edwards and Wendover. Accurate impact prediction data will be received by the RCC from MCC and will be suitably displayed to the recovery controllers. The retrieval force, previously alerted and placed on station will then acquire and recover the vehicle and return it to a selected base within recovery complex.

3.3.2 In the event of a lifting vehicle landing at Holloman, transfer of control will be made at approximately the hypersonic transition point (50-250 miles from touchdown at 100-120,000 feet and mach 3-5). At that point, terminal tracking systems will have acquired the vehicle and piloted voice contact will be established and if possible, visual contact with the landing area will be established by the pilot. Terminal guidance advisory data will be furnished by the terminal controller and vehicle configuration will be verified.

3.3.3 In the event of a landing at Edwards, control will remain at the RCC which will now provide the same terminal functions as described for Holloman.

3.3.4 The retrieval forces at Edwards AFB, Holloman AFB, and Wendover AFB would effect retrieval using existing base resources (i.e., fire trucks, ambulances, helicopters, etc.) supplemented by specialists and equipment provided by the program director. The airborne retrieval force would be at preplanned airborne locations as retrieval backup and assume retrieval responsibilities if the vehicle does not impact land at the desired site.

3.3.5 During a recovery operation, a Retrieval Director will be present at a retrieval console in the RCC Control room and will begin operational control of applicable retrieval forces. A ground force will be on site in the retrieval area and the airborne force(s) will be deployed at prearranged airborne locations. The Retrieval Director will use space vehicle impact information provided in the Recovery Control Room for alterations to pre-planned procedures. When available information will be supplemented by acquisition/tracking information from the airborne retrieval force.

...national defense of the United States within the meaning of the Espionage Laws ... of which in any manner to an unauthorized person is prohibited by law.

3.3.6 In general, the RCC will:

3.3.6.1 Control all land and airborne supporting forces for chase, aerial acquisition, drone support and retrieval.

3.3.6.2 Be responsible for the implementation of recovery safety procedures established by the agency responsible for development of the system.

3.3.6.3 Provide recovery planning, crew training, flight and ground crew integration and rehearsals.

3.3.6.4 Insure that proper support and ground handling facilities are provided for each type of recovered vehicle, to include facilities for the retrieval force.

3.3.6.5 Provide for support aircraft for retrieval chase, range checkout, training and airborne command guidance capability.

3.3.7 For lifting vehicles, the RCC will:

3.3.7.1 Receive mission data and information from any MCC and supporting ranges and will issue commands/advice to the vehicle in order to provide efficient energy management to keep the vehicle in the proper re-entry corridor from deorbit to touchdown.

3.3.7.2 Establish voice communication interfaces with MCC and supporting ranges for vehicle advisory control, range status and inter-agency liaison.

3.3.7.3 Establish data communication interfaces with MCC and supporting ranges to obtain data for use by and display to the RCC.

3.3.8 For ballistic vehicles, the RCC will:

3.3.8.1 Establish voice and data communication interfaces with MCC to receive impact prediction for positioning of retrieval forces.

3.3.8.2 Establish voice and data communication interfaces with terminal site and retrieval forces.

3.3.9 Functions of the RCC; as dictated by vehicle and mission the RCC will:

3.3.9.1 Control the recovery of lifting vehicles, through the issuance of commands/advice from deorbit to touchdown.

... the national defense of the United States within the meaning of the Espionage Law, ... of which in any manner to an unauthorized person is prohibited by law.

3.3.9.2 Receive vehicle tracking/telemetry data from MCC and supporting ranges.

3.3.9.3 Receive impact prediction on unmanned ballistic vehicles from MCC.

3.3.9.4 Monitor critical on-board sub-system and crew physiological data from MCC as required during recovery.

3.3.9.5 Maintain two-way voice communications with MCC, the vehicle and ranges.

3.3.9.6 Compute critical recovery display/decision requirements, emergency recovery actions and alternate landing sites.

3.3.9.7 Receive MCC status information from the appropriate MCC.

3.3.9.8 Receive search data from MCC, as required.

3.3.9.9 Provide for terminal site telemetry, tracking and communications, as required.

3.3.9.10 Provide RCC data and recovery force status to MCC.

3.3.9.11 Provide inter-agency (FAA, etc.) coordination and safety planning.

3.3.9.12 Provide for recovery simulation, rehearsal and training.

3.3.9.13 Organize, dispatch and control the deployment of the retrieval and supporting forces.

3.3.9.14 Provide for support facilities for the ground and air retrieval force.

3.3.9.15 Provide for general post-mission support facilities to include recovered vehicle handling and servicing, as required.

3.3.10 Functions of the retrieval force will be to:

3.3.10.1 Prepare detailed retrieval plans for all space vehicle flights scheduled to terminate in the designated recovery areas.

3.3.10.2 Establish basic retrieval procedures, training and responsibilities for the retrieval forces.

3.3.10.3 Conduct retrieval operations in the recovery areas.

...defense of the United States within the meaning of the Espionage Act...
...in any manner to an unauthorized person is prohibited by law.

3.3.10.4 Locate and expedite physical possession of the vehicle.

3.3.10.5 Assist and provide medical assistance to vehicle crew, if applicable.

3.3.10.6 Safeguard and secure the vehicle.

3.3.10.7 Perform necessary disarming and deactivation of vehicle subsystems.

3.3.10.8 Prepare vehicle for transportation.

3.4 MISSION CONTROL CENTER RELATIONSHIPS.

The precise technical and administrative relationship between the RCC and any specific MCC will be influenced by the MCC agency concerned, the type of vehicle to be recovered, the location of the MCC, the primary mission of the vehicle, and the type and quantity of data intercommunication required. As an initial frame of reference, these influences have been grouped into three major categories which will permit a planning relationship to evolve. These are (1) Air Force unmanned ballistic vehicles, (2) Air Force lifting vehicles and (3) NASA vehicles.

3.4.1 Air Force unmanned ballistic vehicles are now controlled by the Space Systems Division MCC at Sunnyvale, California. No change in the established and proven concept of operation is proposed. This plan provides for a shift in the recovery theater of operations from the Pacific Ocean area to the CONUS recovery complex, but does not propose an abandonment of the Pacific recovery operation or a change of established control responsibility. The MCC will continue to exercise full control over all aspects of the mission, including the command control of the deorbit and re-entry phase. The RCC will be responsible for the terminal area acquisition, retrieval and return of the vehicle within the recovery complex itself. Communications will be required between MCC and RCC for the transmission of impact prediction and necessary voice information.

3.4.2 Air Force lifting re-entry vehicles are not now in existence. The X-20 is the first such system expected to be in operation, however, the location of the MCC for this program has not yet been finally determined. If the MCC for lifting systems is external to the recovery complex, this plan

This document ... defense of the United States within the meaning of the Espionage Laws ... which in any manner to an unauthorized person is prohibited by law.

provides for a transfer of control authority to the RCC at the point of deorbit. Subsequent range instrumentation inputs will be transmitted from the MCC and supporting ranges. Vehicle commands or advice will be transmitted from the RCC to the vehicle.

3.4.3 NASA orbital manned vehicles have heretofore been recovered at sea. The recovery sites for Gemini or Apollo have not yet been announced, but will be in the Southwest United States. Since this plan is concerned only with recoveries within the Edwards-Holloman-Wendover complex, a NASA/RCC relationship need be considered if NASA chooses one of those sites for future recovery operations. The Gemini and Apollo vehicles are semi-ballistic, or have hypersonic lift-drag ratios somewhat greater than zero. This places them in the lifting vehicle class, since their terminal point is not pre-ordained at the moment of deboost or reentry. Therefore, recovery command or advisory control will be required throughout reentry. This control function is being designed into the Houston complex specifically to control the launch, mission and recovery of these two vehicles. The RCC terminal facilities, however, can provide to NASA the capability of terminal area recovery and landing. In this case, the Houston MCC may continue to exercise full control over all aspects of the mission, including the command control of the deorbit and reentry phase. The RCC will be responsible for the terminal area acquisition and retrieval. Communications will be required between MCC and RCC for the transmission of required data including impact prediction (paraglider deployment) to the RCC.

This document contains information affecting the national defense of the United States within the meaning of the Espionage laws, Title 18, U.S.C., Sections 793 and 794. The transmission or revelation of its contents in any manner to an unauthorized person is prohibited by law.

Section IV

SYSTEM CONFIGURATION

4.1 INTRODUCTION.

In order to meet requirements imposed under Section 3.1 and 3.2 and under the assumptions and limitations of 3.2.1 and 3.2.2 the system configuration shown in Figure 4-1 is proposed.

4.1.2 Ballistic recovery at Wendover, Utah requires up range instrumentation to the North at Prince Albert, Canada and to the South at Guaymas, Mexico if available or a ship as an alternate. These stations provide tracking and telemetry monitoring from the deboost point to the blackout region.

4.1.3 Recovery of low inclination, low re-entry angle vehicles will take place at Edwards AFB or Holloman AFB. The reduction of accessible landing area with decreasing velocity is sharply exponential. Delay of maneuver until the high heat region has been traversed would reduce the range potential by 85% for lifting type vehicles. Maneuver must be initiated at high velocity, thus at a long range from the landing site, to make efficient use of the originally large maneuver potential. Once contact has been established by the landing site radar, approximately 350 miles range, the vehicle is largely committed to that specific site. If the vehicle is to utilize the effective maneuver volume, it will be necessary to initiate maneuver during the high heat region or even as far back as atmospheric entry. Cross-range maneuver potential, however, does not decrease rapidly until within 4000 miles of the landing site. Because of this, the tracking network should have spot coverage from deorbit to approximately 4000 miles range-to-go, and more complete coverage during the final 4000 miles, since in this latter area, small maneuver errors may result in uncorrectable final approach footprints. An instrumented corridor about 1000 miles wide and 10,000 miles long is provided from the vicinity of atmosphere re-entry to the recovery site. This corridor, with the ships properly deployed, will provide coverage such that maximum gaps will be less than five minutes.

national defense of the United States within the meaning of the Espionage Laws
of which in any manner to an unauthorized person is prohibited by law.

Figure 4-11. System Configuration

This document contains information affecting the national defense of the United States within the meaning of the Espionage Laws, Title 18, U.S.C., Section 793 and 794, the transmission of which in any manner to an unauthorized person is prohibited by law.

4.1.4 The problem of an ion sheath blackout was considered in the instrumentation of this corridor. Unless the precise trajectory parameters of a vehicle are known, no predictions of actual ion sheath blackout can be made. Using the information available in X-20 studies blackouts of approximately 16 minutes duration may be expected for the G Band transponder. The use of SHF carrier frequencies is considered to be the practical solution for penetrating the ion sheath. Accordingly a SHF capability for tracking and communication with vehicles is incorporated at certain up range sites along the west to east re-entry ground track leading to Edwards AFB and Holloman AFB.

4.2 UP RANGE INSTRUMENTATION.

4.2.1 High Inclination Orbital Recovery.

The considerations listed previously, and as shown in Figure 4-2, leads to location of a re-entry tracking station about 800 nautical miles north of the Wendover Range. A station so located can provide approximately 1000 miles coverage of a trajectory with 80 mile altitude, as shown in Figure 4-3. In some cases, this will be within adequate line-of-sight of the vehicle in a 100 n.m. orbit to initiate deboost from this station, if necessary, for landing within the allotted impact area. Figure 4-1 illustrates the relative locations of several possible stations in the considered recovery scheme. The best available site, for economic and implementation scheduling reasons, is the Prince Albert (Saskatchewan, Canada) Millstone-type Radar, of the Defense Research Establishment of the Department of Defense of Canada and the Royal Canadian Air Force. Also considered were the establishment a new facility at the northernmost limit of the Continental United States (such as at Malmstrom AFB) and the employment of orbiting aircraft along the re-entry path within the U.S. A new station in Canada along the Northern approach to Wendover has not been included, because the Prince Albert Radar site is apparently adequate technically; and if not usable for political reasons, would also prevent establishment of an alternate facility in the same national area.

4.2.1.1 The Prince Albert Radar was examined in the light of the requirements and limitations given in Section III. The Prince Albert installation

national defense of the United States within the meaning of the Espionage Laws
the transmission of which in any manner to an unauthorized person is prohibited by law

Figure 4-2 Re-Entry Profile

This document contains information affecting the national defense of the United States within the meaning of the Espionage Laws, Title 18, U.S.C. Sections 793 and 794, the transmission of which in any manner to an unauthorized person is prohibited by law.

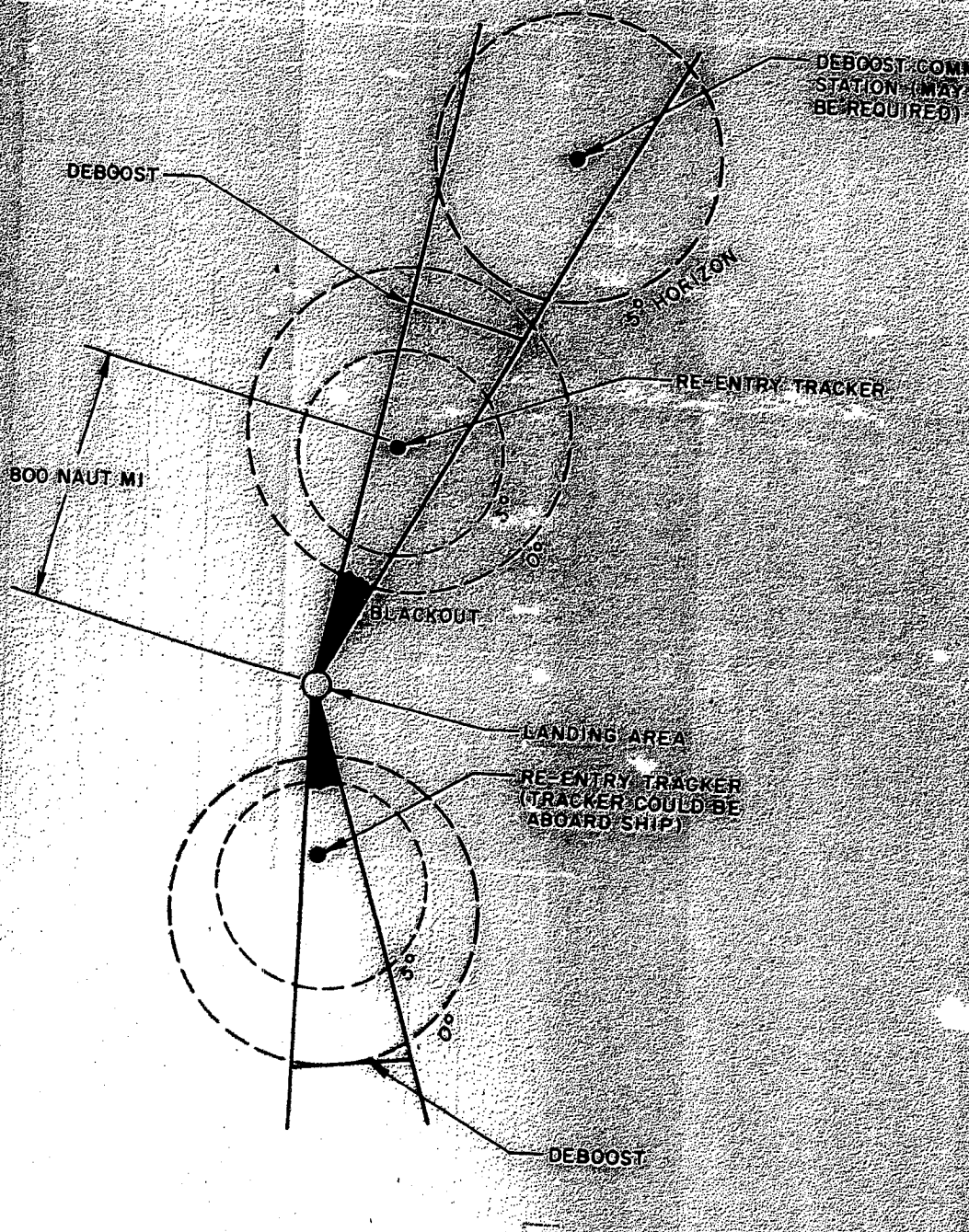

Figure 4-3. Ballistic Trajectory, Track

national defense of the United States within the meaning of the Espionage Laws,
sion of which in any manner to an unauthorized person is prohibited by law.

as similar to the Millstone Hill Radar in Massachusetts and consists of a 400 megacycle instrument with an 84 foot paraboloid 2 degree beam antenna. This site has been tied to the NORAD complex with a communication circuit having a capability for 1200 bits per second, which would satisfy the requirements for acquisition and trajectory measurement data transfer. At present there is no telemetry or command capability at the site.

4.2.1.2 The criteria for ballistic re-entry and considerations illustrated in Figure 4-3, also define a need for a tracking station 800 n.m. south of Wendover AFB, in the vicinity of 27° N latitude and 114° West longitude. Physical factors of this area permit two adequate solutions: Guaymas (Mexico) or a tracking ship. The ideal solution to a south up-range tracker is the NASA Mercury Tracking Station at Guaymas, Mexico (28° N., 110.8° W). This station is presently equipped with an S-Band VERLORT radar, AGAVE acquisition aid and telemetry readout capability. Use of the site would require the installation of a voice-data drop from Nogales, Arizona to the MCC at Sunnyvale. The predominant restraint is the likelihood of non-access for military mission support and related security problems. Since all of the ballistic vehicle re-entry-trajectory measurement needs are met by this facility, concerted effort should be made to obtain the necessary approval.

4.2.1.3 The uncertainty of the Guaymas site availability makes evaluation of an alternate for the same area essential. The preferred device, from the view point of adequate tracking and telemetry readout capability is a range vessel. Two possible operating areas which satisfy the recovery path alignment are the Gulf of California and the Pacific Ocean Coast of Mexico. An example of currently available seamobile tracking platforms is the PMR ship Range Tracker, equipped with an FPS-16, EMS, PDM/FM telemetry readout, command and control line and single-side-Band HF Radio for ship-to-shore communications. Operation between 27 and 28 degrees North latitude, 107 and 111 degrees West longitude would place the ship in the high inclination trajectory sector.

...defense of the United States within the meaning of the Espionage Laws ... of which in any manner to an unauthorized person is prohibited by law.

4.2.2 Low Inclination Orbital Recovery

Vehicles with lift capabilities and low re-entry angle semi-ballistic vehicles suitable for manned re-entry have characteristics sufficiently similar to be treated as the same problem. When the large number of orbits through which re-entry to Edwards and Holloman could be accomplished is considered, provision for instrumentation along all corridors becomes prohibitively expensive. In order to reduce the problem to manageable size, recovery along a corridor which makes best utilization of available sites and equipment has been considered. No provision is made in this plan for information handling other than that which is necessary for the recovery of the vehicle.

The West to East Corridor sites are listed below including two sites (Woomera, Canton) which are not on the direct recovery corridor. They are included because they are in existence and can be of value in recovery from aborts from early orbits.

Site #	Location	Owner	Equipment Installed	X-20 Programmed Equipment
15	Ship West of Australia	Navy	Telemetry (Tlm)	SHF
14	Perth Australia	NASA	S-Verlort-Agave-Tlm	
13	(New Site-On Line between Darwin Aus & Manus Is)	None		
10	Kwajalein Island	Army	Tradex-L-UHF-Tlm	
9	Midway Island	Navy	None	SHF
8	Kaena Point	USAF (AFSC)	S-Verlort-Prelort-Tlm	
7	Kauai Island	NASA	FPS-16 Verlort-Tlm	SHF
6	Ship	Navy	FPS-16 Tlm	
16	Point Arguello	Navy	FPS-16 Tlm	
11	Canton Island	Navy	AGAVE Tlm	
13	Woomera Aus	NASA	FPS-16 AGAVE Tlm	

[illegible] defense of the United States within the meaning of the Espionage Law, [illegible] of which in any manner to an unauthorized person is prohibited by law.

As shown in Figure 4-1 both the trajectories of a single orbit recovery and a three orbit recovery at Edwards pass within range of all the sites considered, except Woomera and Canton as noted above. Proper positioning of the ships west of Australia and between Hawaii and ConUS will give coverage with gaps of less than three minutes. The areas of ion sheath blackout as predicted by the X-20 Program will be covered by program supplied equipment. A typical telemetry station is depicted in Appendix A - Figure A-1.

4.2.2.1 The ship needed west of Australia can be taken from the presently available PMR ships. They can provide telemetry readout and a limited tracking capability at present. One of the ships is scheduled for modification for X-20 tracking and communication support and will be stationed here for tracking during ion sheath blackout.

4.2.2.2 The NASA site at Perth Australia can give limited skin track at S-band. It can also provide VHF telemetry readout. It will provide communications for the ship stationed West of Australia.

4.2.2.3 Establishment of a new site located on a line between Darwin, Australia and Manus Island is required. Exact location of the site is not specified because of political considerations. The station will be equipped for tracking and telemetry. It will also fill a critical gap presently existing in the coverage required for the readout and control of certain polar orbiting vehicles under control of Sunnyvale STC.

4.2.2.4 The Tradex radar at Kwajalein will provide good skin track coverage of any vehicle within its line of sight. It is an advanced development instrument managed by the Army in connection with re-entry vehicle tracking. There are telemetry readout and sending facilities. X-20 will encounter an ion sheath blackout near the eastern limits of coverage of this site.

...national defense of the United States within the meaning of the Espionage Law...
...transmission of which in any manner to an unauthorized person is prohibited by law.

4.2.2.5 Midway Island has no facilities presently installed for tracking or telemetry. An SHF Radar and telemetry together with support facilities will be required. X-20 has programmed transportable SHF equipment for temporary use during single orbit missions.

4.2.2.6 Kauai, and Kaena Point in the Hawaiian Islands are both equipped for C-Band and S-Band trajectory measurements and telemetry readout. They are used extensively in present programs. X-20 will be in the C-Band ion sheath blackout through-out the coverage of these stations. X-20 has programmed for transportable SHF equipment for use at Kauai during multi-orbit missions.

4.2.2.7 The ship, Range Tracker, for use between Hawaii and ConUS is equipped with FPS-16 radar and telemetry. Since X-20 will be out of the ion sheath in this area no modification of the ship is needed.

4.2.2.8 Canton Island can presently provide VHF telemetry readout only. The desirability of installing tracking equipment to provide emergency tracking coverage should be investigated.

4.2.2.9 Woomera is equipped with FPS-16 tracking radar and telemetry equipment. It can also provide emergency coverage with no modifications.

4.3 RETRIEVAL SITES - GENERAL

Each of the three terminal sites will require specific equipment to effect final approach and landing, or vehicle recovery. Edwards AFB is now being equipped with both general and specific terminal range systems for the X-20 program. Additional improvements are planned for both Edwards and Wendover in FY64. The White Sands Missile Range is well equipped with terminal tracking equipment, but would have to be equipped with specific non-standard telemetry receivers at the discretion of the applicable SPO. Each retrieval site will include a Retrieval Operations Center and retrieval forces personnel, aircraft, and specialized retrieval equipment.

... defense of the United States within the meaning of the Espionage Laws ... of which in any manner to an unauthorized person is prohibited by law.

4.3.1 ROC - Retrieval Operations Center.

Ground Equipment in the ROC will consist of plot boards, communication facilities, radio transmit/receive facilities for control of aerial retrieval, air borne recovery, helicopter recovery and ground recovery teams, aircraft & equipment status boards. A table of Airborne Retrieval Aircraft Characteristics is included as Table 4-1. A functional block diagram of a ROC and its equipment is presented in Figure 4-4.

4.3.2 Retrieval Sites.

4.3.2.1 Edwards AFB - The Rogers Dry Lake Area will be utilized for retrieval of low inclination lifting and ballistic vehicles. The Edwards AFB terminal site is equipped with the following major equipment:

SCR 584 radar (MOD II)
Standard IRIG VHF telemetry receivers and demodulators
Internal microwave data transmission
Dual band UHF telemetry/tracking receivers (1435-1535 mc/2200-2300 mc)
Optical trackers
IRIG PCM demodulator, modified for X-20 data

The following equipment is funded for operation in FY 64:

VERLORT S-Band Radar
SHF telemetry/tracking receiver for X-20 program
MCG drone control/tracking van for X-20 program

The following equipment is programmed but not yet funded:

VERLORT C-band Radar
Microwave link to Pt Arguello (PMR)
IRIG Time Code Generation
Radar Acquisition Aid

A data link between the AFFTC Central Data Lab. (BLDG 3940), the RCC, and the Analog Simulator Lab (Bldg 1408) is required. Provisions for a ROC are included in the RCC.

...defense of the United States within the meaning of the Espionage Laws ... which in any manner to an unauthorized person is prohibited by law.

TABLE 4-1

AIR BORNE RETRIEVAL AIRCRAFT CHARACTERISTICS

1. Para rescue & Air borne Equipment Support
   (a) High altitude performance (25,000 and above)
   (b) Endurance in excess of 10 hours
   (c) Speed in excess of 250 KIAS
   (d) Rapid on-off loading of surface vehicles
   (e) Pressurization and temperature control
   (f) Low speed capability for para rescue team deployment
2. Aerial Recovery and DF
   (a) High altitude performancy (25,000 and above)
   (b) Endurance in excess of 10 hours
   (c) Speed in ecess of 250 KIAS
   (d) Pressurization and temperature control
   (e) Aerial Recovery System (All American Engineering)
   (f) Detection/Tracking Capability (Cook DF)
3. Helicopter Pararescue & Equipment Support
   (a) High altitude capability
   (b) Load capability -- 3000
   (c) 250 mile radius of action
   (d) DF capability

...of the United States within the meaning of the Espionage Laws ... in any manner to an unauthorized person is prohibited by law.

4.4 RECOVERY CONTROL CENTER.

4.4.1 The objective of the recovery system is to safely recover the pilot and/or vehicle in an efficient manner. Each major equipment component has been judged on the criteria that it must increase the probability of a successful recovery over that obtainable by relying on the airborne system alone. Equipment, sites or systems which have failed to meet the established criteria have been discarded. To generate realistic requirements, functions of the RCC system have been divided into three categories: data gathering, data processing and data transmission. Refer to Figure 4-5 - RCC Block Diagram.

4.4.1.1 Of first concern is the gathering of data for computation of control commands and display of pertinent data for monitor and decision. These data will enter the RCC from 1) the Mission Control Center, 2) the range sensors measuring vehicle position and velocity, 3) the airborne vehicle, and 4) auxiliary sources. Receiving-formatting, routing and display of pertinent recovery data are the computer functions applicable to the recovery of ballistic vehicles. The major parameters involved in the total operation are:

Navigation Parameters

Position - down range, cross range, altitude
Velocity - down range, cross range, verticle
Acceleration - normal, tangential
Attitude - pitch, roll, yaw
Vehicle Control - pitch, roll, drag

Safety Parameters

Skin Temperatures
Dynamic pressure
Vehicle operational status
Critical aeromedical quantities
Critical environmental quantities

4.4.1.2 The data processing equipment within the system is concerned with the generation of control commands to maintain the vehicle on a safe and optimum flight path (lifting vehicles) and the generation of data displays to

...the United States within the meaning of the Espionage laws, ...which in any manner to an unauthorized person is prohibited by law.

Figure 4-5. RCC Block Diagram

This document contains information affecting the national defense of the United States within the meaning of the Espionage laws, Title 18, U.S.C., Section 793 and 794, the transmission of which in any manner to an unauthorized person is prohibited by law.

ground monitors. More specifically, the RCC data processing system will utilize available data to provide:

1) radar acquisition data (for terminal sites)
2) trajectory defining parameters
3) information for Center displays
4) vehicle footprint or ground area attainable
5) command signals for vehicle control
6) simulated trajectory to predict dangerous situations
7) extrapolated trajectory during periods of no coverage
8) correction functions for precomputed stored data
9) data consistency checks
10) emergency data for abort or alternate plan
11) recovery mission simulations for rehearsal and training

A high speed digital computer will be required as well as a large scale flexible analog computer to furnish vehicle simulations and hybrid computations. Additional peripheral data processing equipment will be need to reformat data, provide displays, act as buffers, provide time synchronization and control communications.

4.4.1.3 The communications and data transmission system for the RCC will depend mainly on existing and programmed world networks. Internal communications will be based on the AFETC microwave data transmission system from Edwards to Wendover and the proposed system from Edwards to Pt. Arguello. Land lines will be required from Edwards to Holloman to pass pertinent data to Holloman in the event of a landing at that location. Additional direct circuits to the RCC will be required from applicable Mission Control Centers, the FAA and ultimately from such sources as Space Track and Weather Forecasting networks. External data transmission between the RCC interfaces mentioned and the various range sites should not be a function of the RCC. Specific requirements will be negotiated with major range agencies to satisfy individual mission needs, however, communications interface equipment will be required within the RCC to provide compatibility with the expected variety of data formats to be furnished.

The RCC display complex will consist of summary displays which show the most important parameters and their deviations from optimum, with allowable safety limits for rapid assessment of mission status. Individual displays will present to different monitors information of a more specific type. The principal monitoring points within the center will be three system monitoring consoles - navigation, aeromedical and vehicle status. Another console will be monitored by a communications officer who will establish and maintain contact with range stations, mission centers, alternate landing sites, recovery forces and other agencies. A terminal recovery traffic console will provide details concerning impact point, force deployment, chase plane vectoring, rescue and recovery related units and air traffic control.

Summary wall displays mounted in front of all operators, will indicate range status data such as equipment readiness, target acquisition, data being transmitted, and terminal site status. A main wall map display will show vehicle position, trajectory, footprint and heading.

4.5 COMMUNICATIONS FOR RECOVERY

4.5.1 The requirements for uprange communications support are based on the following:

1. Communication support has been limited to that needed for transfer of trajectory and telemetry data, look angles and, command/control.
2. Trajectory measurement data will include look angles, timing, smoothed tracking data in near real time, post flight data in delayed time.
3. Telemetry data will consist of selected channels of information required for tracking and recovery control, such as deboost data and critical vehicle elements concerning attitude and condition, which will be relayed to the RCC by voice only.
4. Command channels will be provided for initiating deboost on emergency basis or for Recovery Control Center communication with vehicle.
5. Station support communications for facilities already in existence will not be considered, new sites will require supporting communication packages.
6. Encryption equipment, if required, will be provided by the SPO.

4.5.2 The high inclination ballistic vehicle recovery corridor instrumentation communications network has been considered as two links, North-to-South from the Prince Albert Radar, and South-to-North from a PMR ship or Guaymas, Mexico, to the MCC at Sunnyvale. Refer to Figure 4-6, Figure 4-7 and Table 4-2.

4.5.2.1 The northern corridor will consist of a primary tracking station at Prince Albert, Saskatchewan. Since all elements of this corridor are on land, the transmission can be accomplished by land line, or microwave, available from commercial carriers, and provided through the Defense Communications Agency. Terminal facilities, exclusive of encryption and special encoding equipments, may also be leased, per current DOD and USAF regulations. The circuits will not be required continuously, and may therefore be procured as Engineered Military Circuits on call for use only during the recovery phase of mission flights. Since all major routes required to accomplish connection between the tracking sites, the MCC and the RCC are already in existence, no special construction will be required, except for tributary connections as noted below.

The Prince Albert Radar site considered for the 800 n.m. tracker on the North corridor is currently connected to the SPADATS center in NORAD, with a 100 wpm full period teletype line, via the Canadian National Microwave and AT&T trunks. A 100 wpm encrypted teletype circuit exists from NORAD to Sunnyvale, California. A 100 wpm circuit between Sunnyvale and Edwards AFB is required. A voice circuit between the MCC and Prince Albert will also be needed. The voice line will not be encrypted, as presently planned.

4.5.2.2 The southern corridor will consist of a primary tracking station at either Guaymas, Mexico, or a PMR ship at 27 degrees North, 110 degrees West.

4.5.2.2.1 The present NASA site at Guaymas is directly connected to the Goddard SFC in Maryland by an allocated 60 wpm teletype alternate voice line leased from the common carriers. If use of this site is approved, a 100 wpm teletype or 1200 bps data link and a voice circuit to Sunnyvale is required.

...United States within the meaning of the Espionage Laws...
...ry manner to an unauthorized person is prohibited by law.

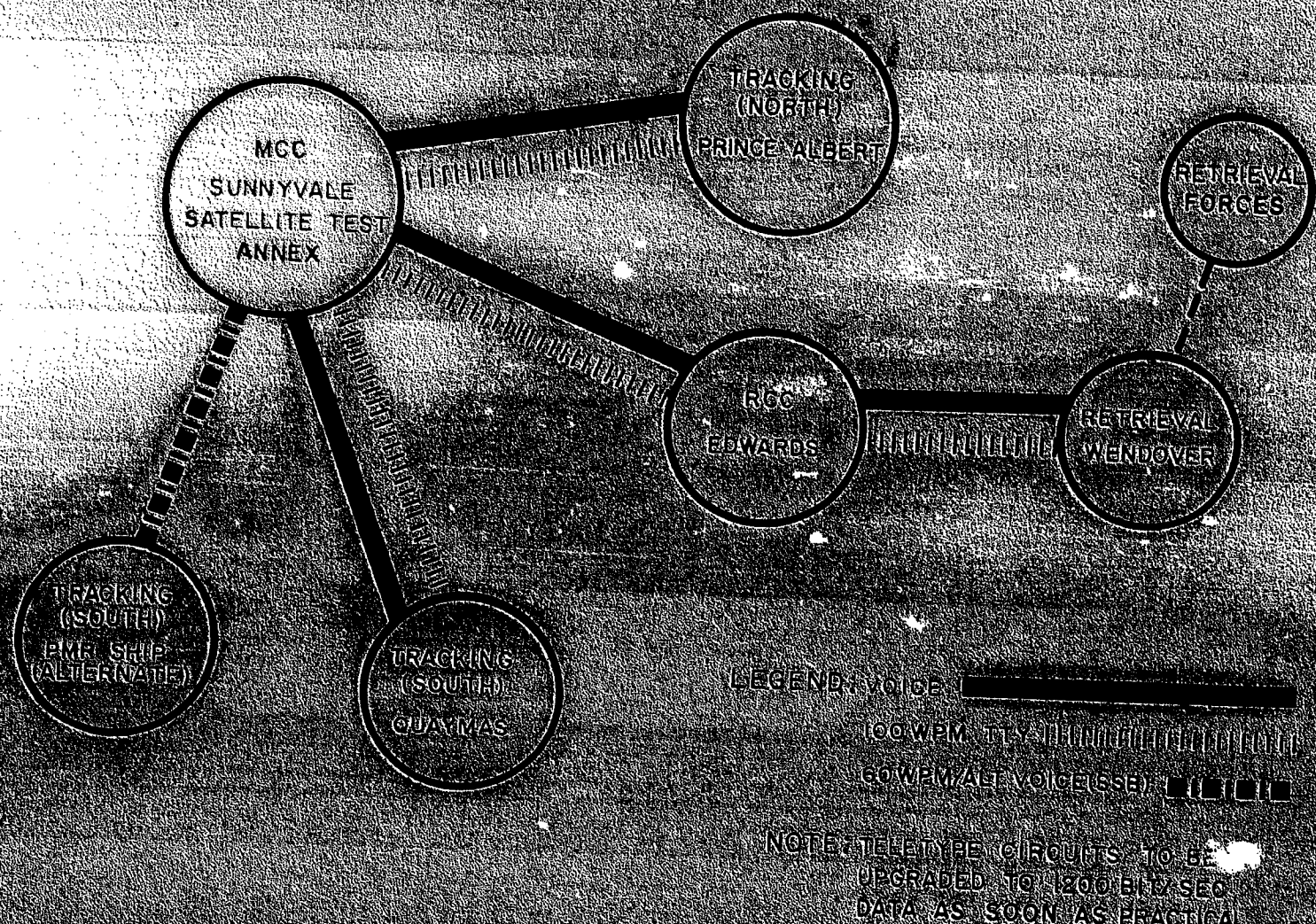

Figure 4-6 Land Recovery Ballistic Vehicle Network

Figure 4-7. North-South Recovery-Link Requirements

This document contains information affecting the national defense of the United States, within the meaning of the Espionage laws, Title 18, U.S.C., Section 793 and 794, the transmission of which or the revelation of which in any manner to an unauthorized person is prohibited by law.

TABLE 4-2

BALLISTIC VEHICLE RECOVERY COMMUNICATIONS

From	To	Mode				Circuit Type	Carrier	User	Cost (Approx) in Thousands			
		Voice	60 wpm	100 wpm	1200 Data				Voice	60 wpm	100 wpm	1200 Data
Prince Albert	Sweetgrass	1	Poss	1	Poss	Wire	CNT	NORAD	15.6	8.65	10.2	15.6
Sweetgrass	Colorado Springs	1	Poss	1	Poss	Wire	AT&T	NORAD	22.8	15.0	18.0	22.8
Colorado Springs	Sunnyvale	1	Poss	1	Poss	Wire	AT&T	NORAD	25.2	18.0	20.4	25.2
Sweetgrass	Sunnyvale	Poss	Poss	Poss	Poss	Wire	AT&T		25.2	18.0	20.4	25.2
Guaymas	Nogales	1	1	Poss	Poss	Wire	MCDO	NASA	24.0	16.8	19.2	24.0
Nogales	Sunnyvale	Poss	Poss	Poss	Poss	Wire	AT&T		13.7	12.0	13.0	13.7
Ship	Sunnyvale	1	Poss	Poss	Poss	HF/SSB	USN	FMR				
Sunnyvale	Edwards	Poss	Poss	Poss	Poss	Wire	AT&T		10.3	10.6	8.05	10.3
Edwards	Werdover	Poss	Poss	Poss	Poss	Wire	AT&T		14.05	9.0	11.05	14.05

This document contains information affecting the national defense of the United States within the meaning of the Espionage Laws, Title 18, U.S.C. Section 793 and 794, the transmission or revelation of which in any manner to an unauthorized person is prohibited by law.

4.5.2.2.2 The PMR tracking ship considered for the southern uprange station (Range Tracker) is currently equipped with HF Radio gear for both voice and teletype. The ship can operate directly to San Diego, Point Mugu and/or MCC over this medium. Upgrade of the data service to 1200 bps should be considered for later missions in recovery if any modifications are contemplated for the Range Tracker. This will require 6/12 KCS HF/SSB transmitter/receiver stations and digital data modems (Rixon Sebit, Collins Kineplex or Western Union), along with a message composer, and high speed printout.

4.5.2.3 The Wendover Site will require both internal and external communications support. The terminal tracking equipment will be located some distance from the Retrieval Operation Center and will need comm service to the ROC and the RCC. The latter connection is necessary for obtaining look angle data from the uprange stations as the vehicle approaches terminal conditions and impact. The ROC will require a landline tributary to common carrier facilities. A teletype send/receive station and reperforator transmitter are required in the ROC communications center for relay of the uprange tracking data from the RCC to the Wendover terminal instrumentation. Voice lines patched directly through the ROC from the RCC to the radar and DF sites on a party line will be required for final vehicle acquisition and flight termination. An intercom will be needed to net the sites together for coordination. The external circuits for 100 wpm TTY and voice will be included in the ROC to RCC communications plan.

4.5.3 The low inclination semi-ballistic and lifting vehicle recovery corridor instrumentation communications network is essentially Trans-Pacific and Western CONUS oriented. The farthest uprange station proposed for this corridor is the PMR ship west of Australia, with Perth, a new station between Darwin and Manus, Kwajalein, Midway, Hawaii, PMR ship between Hawaii and Point Arguello composing the trans-Pacific network. The Point Arguello, Point Mugu and Edwards comprise the land-based stations for landing at Edwards, or Holloman. Refer to Figure 4-8 and Table 4-3.

[illegible] the United States within the meaning of the [illegible] any manner to an unauthorized person is prohibited [illegible]

Figure 4-8. West-Pac Recovery Link Requirements

This document contains information affecting the national defense of the United States within the meaning of the Espionage Laws Title 18, U.S.C. Section 793 and 794, the transmission of which in any manner to an unauthorized person is prohibited by law.

TABLE 4-3

LIFTING VEHICLE RECOVERY COMMUNICATIONS

From	To	Mode: Voice	Mode: 60 TTY	Mode: 100 TTY	Mode: 1200 Data	Circuit Type	Carrier	User	Cost-Approx: Voice	Cost-Approx: 60 TTY	Cost-Approx: 100 TTY	Cost-Approx: 1200 Data
Ship	Perth	Poss	1	Poss	NA	HF SSB	AGPO	NASA				
Muchea	Perth	1	3	Poss	Poss	Wire	AGPO	NASA	.9	.5	.6	1.
Perth	Adelaide	1	2	Poss	Poss	Open Wire	AGPO	NASA	31.5	29.3	35.3	39.7
Woomera	Adelaide	1	4	Poss	Poss	Open Wire	AGPO	NASA	7.5	5.6	7.0	9.3
Adelaide	Melbourne	1	2	Poss	Poss	Open Wire	AGPO	NASA				
Melbourne	Camberra	1	2	Poss	Poss	Coax Cable	AGPO	NASA	16.2	13.9	16.5	20.2
Camberra	Sydney	1	2	Poss	Poss	Microwave	AGPO	NASA				
Sydney	Oahu	1	1	NA	NA	HF	RCAC	NASA				
Sydney	Oahu	Poss	Poss	Poss	Poss	Subcable	Seacom		396	177.6		396
Sydney	Vancouver	NA	1	NA	NA	Tel. Cable	BCC	NASA				
Camberra	Oahu	1	6	Poss	NA	HF	Navy	Unkn				
Ship	Sydney	Poss	Poss	Poss	NA	HF	RCAC					
Ship	Kwajalein	Poss	Poss	NA	NA	HF	Navy	PMR				
Kwajalein	Oahu		5	Poss	NA	HF	Navy	PMR				
Kwajalein	Eniwetok	3	8	Poss	NA	HF	Navy	PMR				
Eniwetok	Oahu	3	16	Poss	NA	HF	Army	Unkn				
Eniwetok	Oahu	3	16	Poss	NA	HF	Navy	Unkn				
Kwajalein	Guam		3	Poss	NA	HF	Navy	Unkn				
Guam	Oahu	1	1	Poss	NA	FPIS	Army	PMR				
Guam	Oahu	3	16	Poss	NA	HF	AF	Unkn				
Guam	Oahu	2	6	Poss	NA	HF	Navy	Unkn				
Canton	Oahu	NA	1	Poss	NA	HF	FAA	PMR				
Canton	Oahu	2	Poss	Poss	NA	HF	Navy	PMR				
Midway	Oahu					Subcable	Navy	PMR				
Barking Sands	Oahu	8	1	Poss	Poss	FPTS	Leased	PMR				
Ship	Oahu	1	1	Poss	NA	HF	Navy	PMR				
Houston	Edwards								27.5	20.0	24.0	27.5
Oahu	S. Fran	4	2	Poss	Poss	Subcable	ATT	PMR	240	105		240
S. Fran	Pt. Mugu	4	2	Poss	Poss	Wire	ATT	PMR	7.8	5.7	7.0	8.3
Pt. Mugu	Edwards	Poss	1	Poss	Poss	Wire	ATT	PMR	3.6	2.8	3.5	4.5
Oahu	Vancouver	80	Poss	Poss	Poss	Subcable	Seacom		240	105		240
Vancouver	Edwards					Wire	ATT		21.2	19.0	22.8	26.4
Oahu	S. Fran	1	3	Poss	Poss	Subcable	ATT	NASA	240	105		240
Holloman	Edwards	Poss	Poss	Poss	Poss	Wire	ATT		19.1	12.9	15.4	19.1

This document contains information affecting the national defense of the United States within the meaning of the Espionage Laws, title 18, U.S.C., Section 793 and 794, the transmission of which in any manner to an unauthorized person is prohibited by law.

4.5.3.1 The Perth, Australia, site can be tied to the Woomera site via Australian land-line and microwave circuits for look angle and coordination data. Both teletype (60 wpm) and voice are readily available and leasable through regular DOD channels (DCA). Security of the teletype system can be arranged, but the equipment will need to be provided.

4.5.3.2 The Woomera site can obtain service via either Sidney or Melbourne to Hawaii and the RCC. Service is available by land-based HF-SSB directly to Hawaii, or by existing common user circuits to Okinawa and Guam, to Hawaii. Local facilities at Woomera for both voice and 60 wpm teletype can readily be obtainable, as part of the PMR/Mercury net, PMR missile range extension, on separate rental arrangements via DCA. The use of USAF or DOD transmit/receive teletype and voice subset terminals may not be permitted, so that locally obtainable systems may be required. By late 1964, circuits should be available on the British Commonwealth Cable, through Sidney to Aukland, Suva and Fanning Island directly to Hawaii, for both voice and 1200 bps data service.

4.5.3.3 The PMR ship stationed west of Australia will be able to contact the system through ship to shore either at Perth or Darwin, Australia.

4.5.3.4 Communications for the new site will be determined after it is specified. If located at Darwin, communication will be by land lines and Pretest Communication Cable. If located on an island HF/SSB to either Darwin or Kwajalein will provide entry into the system.

4.5.3.5 The next station proposed for the recovery corridor instrumentation is Kwajalein which is currently served via Eniwetok and Hawaii. No voice capability is presently available. Voice override is required for uprange control. An alternate path should be available via the AT&T trans-Pacific Cable in late 1963, through the Wake Island Cable landing and proposed Wake to Eniwetok span for future (1964 and later) operations.

4.5.3.6 The Canton Island facilities are essentially minimal at this time, being used for the NASA Mercury program alone. The present records indicate a 60 wpm teletype, HF radio link to Hawaii for passage of telemetry data alone. A complete voice and 100 wpm teletype facility is required.

...tense of the United States within the meaning of the Espionage Laws ... in any manner to an unauthorized person is prohibited by law.

After the middle of 1964, Canton Island will be better serviced by the British Commonwealth Cable.

4.5.3.7 Adequate voice and data facilities are available from Midway to Hawaii.

4.5.3.8 The Kauai and Kaena tracking stations are adequately equipped for both voice and teletype services, and therefore require only the scheduling of facilities for connection to the RCC at Edwards during recovery operations terminating at Edwards or Holloman. They are connected to the mainland by Submarine Cable. Relay operations to link Kauai/Kaena Pt. with Midway, Kawajelein, Canton and the PMR ship (between Hawaii and the West Coast) will be provided by existing equipments in the Hawaiian Comm Complex. The high speed satellite data network between Kaena Pt and the STC, Sunnyvale will be used. The STC has a highly developed data handling and data routing capability which can be used in conjunction with wide band data link between Sunnyvale and Edwards via Vandenberg Tracking Station and Point Arguello.

4.5.3.9 A PMR tracking ship is required between Kauai and Point Arguello. The data transfer and voice needs are satisfied by HF/SSB link with the ship-shore terminal at Point Mugu. The track acquisition data is obtainable from either the Kauai-Hawaii link or from Point Mugu, after relay from the Kwajalein or Canton Island tracking stations, as well as Kauai, through Hawaii, by submarine cable, through San Francisco to Point Mugu. The Point Mugu facilities will serve as a relay to the Edwards RCC.

4.5.3.10 The Point Mugu and Point Arguello tracking facilities are already served by both military and common carrier facilities, for routine PMR/ Vandenberg operations. The RCC will receive uprange data from both the Hawaiian relay and Point Mugu, in the event of partial degradation of service, during the period of recovery just before blackout in the ion sheath. The Point Mugu facilities will provide relay service for look angle acquisition data from uprange to both the PMR ship and the Point Arguello tracking facilities, if employed.

SECTION V

LOGISTICS AND RESOURCES

5.1 FACILITIES - GENERAL

A careful evaluation of existing installations and their capability for contributing to the land recovery of all types of space vehicles indicates that the major portion of facilities and equipment necessary are currently available as national assets. In those instances where the capabilities of an installation are limited, or where no installation currently exists, construction of augmented or new facilities is proposed to fulfill a specified need. These new requirements are enumerated in succeeding paragraphs. Cost estimates and design and construction schedules are also included to enable compilation of costs associated with development of a land recovery capability and allow time phasing of funding and other events to meet a given operational implementation date.

5.1.1 Edwards AFB, California - The RCC at Edwards will be integrated with Retrieval Operations Centers at Edwards, Holloman, and Wendover. No space is currently available which can be diverted in support of this function without seriously curtailing existing aircraft and other test programs. The Science Laboratory, Space Training and Recovery, which includes an RCC, was programmed and planned for construction under the FY-64 Military Construction Program but has been deferred to the FY-65 MCP. The RCC facility must be provided to meet Land Recovery Program dates. Construction lead time requires the .795 mof available FY-64 MCP funds be utilized. (Refer to Figure 5-1 and Table 5-1.)

5.1.2 Holloman AFB, New Mexico - A Retrieval Operations Center will be established within an existing Range Operations Building. All required support can be furnished from available assets and no new facilities will be required.

This document contains information affecting the national defense of the United States within the meaning of the espionage laws, Title 18 U.S.C. Sections 793 and 794. The transmission or revelation of its contents in any manner to an unauthorized person is prohibited by law.

5.1.3 Wendover Air Force Auxiliary Field, Utah - This auxiliary field is presently de-activated and on a caretaker status. Existing facilities are available for immediate activation to support the establishment of a Retrieval Operations Center. Recent efforts (FY-62) resulted in modification of some of the facilities in support of other space system activaties. These modified facilities would be readily adaptable for support of recovery functions. Civil Engineer and other housekeeping support will be obtained from Hill AF B in accordance with current Air Force Regulations.

5.1.4 Up-Range Installations - Generally, the stations required for up-range tracking and telemetry coverage of ballistic and lifting re-entry vehicles are existing. In some instances these stations will require installation of additional equipment and associated facility construction. Two new stations must be provided in entirety. Present plans consider the use of van-mounted tracking and telemetry equipment for augmentation of existing or establishment of new stations.

5.1.4.1 Prince Albert, Canada - Augmentation of the existing research station at Prince Albert will be required to provide a van-mounted telemetry capability. Additionally, some type of support facilities will be required for (1) housing of the vans in this arctic environment, (2) storage, (3) maintenance of telemetry equipment, and (4) engineering and administrative space for assigned personnel. Construction lead time requires the .165 M of available FY 64 MCP funds be utilized.

5.1.4.2 Darwin, Australia - Two possible locations have been considered for establishing a new tracking and telemetry station within the southern portions of the re-entry corridor to allow required coverage. Tentatively, a location in the Darwin, Australia area has been selected. The second location considered is Manus Island. Cost estimates furnished are based on the Darwin location only. Should a decision be reached to locate on Manus Island, estimates for site preparation and construction of supporting facilities must be increased by $1,400,000. Construction lead time requires the .380 M of available FY 64 MCP funds be utilized.

...defense of the United States within the meaning of the Espionage Laws ... in any manner to an unauthorized person is prohibited by law.

5.1.4.3 Midway Island, South Pacific - Required coverage uprange will necessitate establishment of a new tracking and telemetry station at Midway Island. Van-mounted instrumentation equipment is proposed with all necessary supporting technical facilities. Support facilities for assigned personnel will be provided by installation of trailers similar to those currently in use at Annette Island and Kodiak Island, Alaska. Construction lead time requires the $324 M of available FY 64 MCP funds be utilized.

5.1.5 Base Support - Civil Engineering support will be required from assigned support agencies for existing bases and stations. Joint tenancy, inter or intra command, and foreign government support agreements must be negotiated in many instances. Advance notification to all applicable commands and/or national agencies should be initiated on approval of this plan to allow orderly personnel and equipment programming and procurement.

5.2 MANPOWER.

5.2.1 Edwards RCC - The manning of an RCC at this site will require 50 personnel, consisting of 14 officers, 15 airmen and 21 civilians (GS). (Refer to Table 5-5.)

Contractual support will be provided for computer maintenance. An augmentation of 6 to 8 contractor computer programming personnel will be required at the recovery site to support the RCC operations. These personnel will be responsive to the programming requirements of both the Program Director and the Director of Recovery Operations.

Base maintenance support personnel will require augmentation in accordance with AFR 66-1 to support the 2 H-43 helicopters and TDY aircraft utilized for aerial retrieval forces.

5.2.1.1 Edwards ROC - The manning of the ROC will require 21 personnel, consisting of 4 officers, 16 airmen and 1 civilian (GS).

The communications officer(s) and airmen will be sent TDY, as required, to support the ROC's at Wendover and Holloman for specific missions. The three pararescue teams are a new requirement. These personnel, adequately trained to do paramedic and pyrotechnic work, will be dropped from aircraft or helicopters in the retrieval impact area.

This document contains information affecting the national defense of the United States within the meaning of the Espionage Laws, Title 18, U.S.C., Section 793 and 794, the transmission of which in any manner to an unauthorized person is prohibited by law.

SECRET

TABLE 5-1

RECOVERY IMPLEMENTATION PLAN FACILITY REQUIREMENTS ESTIMATES & SCHEDULES

Program: Land Recovery of Space Vehicles

Location: AFFTC, Edwards AFB, Calif

Facility Description: Recovery Control Center to house required computation and data processing equipment, control center, communications equipment and assigned personnel.

Brief Justification:

Adequate facilities to support land recovery control functions must be provided to allow the early achievement of an operational capability for recovering space vehicles. The RCC is the nucleus of the Recovery Area Complex -- manned by Edwards AFB, Wendover AFAF and Holloman AFB.

Item	Construction Cost Estimate ($ Million)					Design		Construction		
	FY-64	FY-65	FY-66	FY-67	FY-68	Start	Comp	Award	BOD	Comp
Recovery Control Center (new) 26,800 Sq Ft	.750					4/63	10/63	12/63	9/64	11/64
Est Design Cost	.045									
Total	.795									

SECRET

SSOR-229 5-5

TABLE 5-2

RECOVERY IMPLEMENTATION PLAN FACILITY REQUIREMENTS ESTIMATES & SCHEDULES

Program: Land Recovery of Space Vehicles

Location: Prince Albert, Canada

Facility Description: Augmentation of existing Tracking Station to provide telemetry capability through installation of van-mounted equipment and necessary technical, engineering, administrative and personnel support facilities.

Brief Justification: This station is required to provide the up-range data for re-entering ballistic vehicles terminating in the Woodward Air Force Auxiliary Field Recovery Area.

Item	Construction Cost Estimate (Millions)				Design Start	Construction Award	Construction Complete
	FY-64	FY-65	FY-66	FY-68			
Tracking Station (Augmentation)	.155				3/65	6/65	10/65
Est Design Cost	.010				5/65		
TOTAL	.165						

This document contains information affecting the national defense of the United States within the meaning of the Espionage laws, Title 18, U.S.C., Section 793 and 794, the transmission of which or the revelation of which in any manner to an unauthorized person is prohibited by law.

TABLE 5-3

RECOVERY IMPLEMENTATION PLAN FACILITY REQUIREMENTS ESTIMATES & SCHEDULES

Program: Land Recovery of Space Vehicles

Location: Darwin, Australia

Facility Description: Tracking and Telemetry station consisting of facility construction required for installation of Van-mounted equipment, provision of technical, engineering, administrative and personnel support facilities, and necessary site development.

Brief Justification: This station is required to provide coverage of re-entering vehicles after such vehicles pass beyond the limits of the Woomera, Australia, Station.

Item	Construction Cost Estimate (Millions)					Design		Construction		
	FY-64	FY-65	FY-66	FY-67	FY-68	Start	Comp.	Award	IBOD	Comp.
Tracking & Telemetry Station	.350					1/63	9/63	11/63	9/64	11/64
Bit Design Cost:	.030									
Total:	.380									

This document contains information affecting the national defense of the United States within the meaning of the Espionage Laws, Title 18, U.S.C. Section 793 and 794, the transmission or revelation of which in any manner to an unauthorized person is prohibited by law.

SECRET

SECRET

SECRET

TABLE 5-4

RECOVERY IMPLEMENTATION PLAN FACILITY REQUIREMENTS

ESTIMATES & SCHEDULES

Program: Land Recovery of Space Vehicles

Location: Midway Island, South Pacific

Facility Description: Tracking and Telemetry Station consisting of van-mounted instrumentation equipment, tracking equipment, technical, engineering, administrative, and personnel support facilities.

Brief Justification: This installation is required to provide an instrumented corridor up-range for land recovery efforts proposed at the Edwards AFB, Holloman AFB recovery areas.

Item	Construction Cost Estimate (Millions)					Design		Construction		
	FY-64	FY-65	FY-66	FY-67	FY-68	Start	Comp.	Award	BOD	Comp.
Tracking and Telemetry Station	.300					4/63	9/63	11/63	9/64	11/64
Est Design Cost:	.024									
Total:	[illegible]									

SECRET

This document contains information affecting the national defense of the United States within the meaning of the espionage laws, Title 18, U.S.C., Section 793 and 794, the transmission of which in any manner to an unauthorized person is prohibited by law.

TABLE 5-5

MANPOWER REQUIREMENTS

Function	Officers	Airmen	Civilian (GS)	Contractor and Foreign Nationals	
Edwards RCC					
Commander	2	1	1		
Communications	1	5	2		
*Computer Operators	1	6	6		
Control and Operations	5	3	6		
Engineering and Evaluation	4	0	4		
**Computer Programming	1	0	2		
	14	15	21		
SUB-TOTAL					50
*Computer maintenance will be accomplished by contract.					
**6 to 8 contractor computer programming personnel required.					
Edwards ROC					
Commander	1	2	1		
Communications	3	8			
Pararescue	0	6			
	4	16	1		
SUB-TOTAL					21
Holloman ROC					
Commander	1				
	1				
SUB-TOTAL					1
Wendover ROC					
Commander	1				
Communications	1	2			
	2	2			
SUB-TOTAL					4
Prince Albert					
Commander	1			18	
	1			18	
SUB-TOTAL					19
Guaymas					
Commander			1	18	
			1	18	
SUB-TOTAL					19
Midway Island					
Commander	1			38	
	1			38	
SUB-TOTAL					39
Darwin, Australia					
Commander	1			38	
	1			38	
SUB-TOTAL					39
TOTALS	24	33	23	112	192

[illegible] the national defense of the United States within the meaning of the Espionage Law, Title 18 [illegible] the transmission of which in any manner to an unauthorized person is prohibited by law.

5.2.2 Holloman AFB - Currently available manpower capabilities of Holloman AFB and the WSMR are adequate to support the frequency of the land recovery operation in the time period considered in this report. Normal REWAR (Request for work and resources) procedures processed through the AFMDC will be utilized to secure and schedule such national range facilities as instrumentation, communications, computers, land recovery crews and equipment, and mission and Range Safety planning assistance. Staging of project support aircraft into Holloman AFB for extended periods of time will require augmentation of maintenance personnel in accordance with AFR 66-1. No personnel requirements are tabulated for this contingency since these personnel would be secured from the basic support complement assigned on this report at Edwards AFB and Hill AFB.

5.2.3 Wendover AFB - The Wendover ROC will be manned by 2 officers and 2 airmen, caretaker status only, except during missions, then augmented by manning from the Edwards ROC. One officer will be required as liaison at Hill AFB to effect common base support.

5.2.4 Up Range.

5.2.4.1 Prince Albert - One (1) officer (Approximately 18 personnel will be required to man this TLM site - Canadian Nationals.)

5.2.4.2 Guaymas - One (1) civilian (Approximately 18 personnel will be required to man this TLM site - Mexican Nationals.)

5.2.4.3 Midway Island - One (1) officer (Approximately 38 contractor personnel will be required to man this site.)

5.2.4.4 Darwin, Australia - One (1) officer (Approximately 38 personnel will be required to man this site - Australian Nationals.)

5.3 RETRIEVAL FORCES.

5.3.1 The retrieval forces required for an aerial pick-up would be furnished TDY from the 6594 Aerospace Test Wg. This would consist of 4 JC-130B aircraft and a crew of 10 personnel, plus 2 maintenance men. Total - 12 officers, 36 airmen.

5.3.2 The retrieval forces required for non-aerial recovery (ground impact) would be augmented as follows:

2 - C-130B aircraft with DF capability
2 - H-43B helicopters
3 - Pararescue teams
TOTAL - 10 officers, 16 airmen

5.4 SUMMARY.

Total manning requirements are:

Officer	Airmen	Civilian	Contractor and Foreign Nationals	TOTAL
23*	33	23	112	191

5.5 TRAINING.

5.5.1 General training consists of:

Qualified authorized military personnel and qualified replacement and augmenting personnel; cross-training personnel at other than AFSC installations in order to familiarize all personnel with individual equipments and their integration into the recovery system.

5.5.1.1 The following types of training are required:

Contractor special training. Training of military and civilian personnel on a TDY basis at a contractor's plant or facility for familiarization with such specialized equipment as computers, airborne DF, etc.

Training by ATC. Conducted to familiarize military and civilian personnel with the maintenance and operation of standard military and contractor equipments utilized in the recovery system.

On-the-job training. Utilizes cadre personnel as instructors - classroom instruction utilizing mock-ups, lectures, and demonstrations to insure that all personnel are familiar with all general equipment and instrumentation, and the specialized vehicle and equipment peculiar to each mission.

---

* One (1) officer required at Holloman AFB can be provided by the AEMDC.

...defense of the United States within the meaning of the Espionage Laws, ... of which in any manner to an unauthorized person is prohibited by law.

Rehearsals of each mission will be utilized to confirm the adequacy of the individual and integrated training programs.

5.5.1.2 Early officer inputs from appropriate Institute of Technology training programs are required to staff the personnel authorizations requested in 5.2.

...al defense of the United States within the meaning of the Espionage Laws ... of which in any manner to an unauthorized person is prohibited by law.

SECTION VI

DEVELOPMENT PROGRAM IMPLEMENTATION

6.1 Introduction.

The Lead Division Concept should be followed in the implementation of this plan to insure continuity and smooth integration of all resources and facilities into an effective Land Recovery Complex. Failure to provide this basic management structure will create problems in providing the required integrated effort to establish an early CONUS land recovery capability.

6.2 Development Approach.

6.2.1 The capability for recovery of re-entry vehicles will be developed in stages. Completion of these stages will provide a capability to recover:

Ballistic vehicles on a North to South or South to North pass at Wendover.

Gemini/Apollo type vehicle on a West to East pass at Edwards or Holloman.

Lifting vehicles on a West to East pass at Edwards or Holloman.

6.3 The general actions are; Refer to Table 6-1 and Table 6-2.

6.3.1 Designate Management Organization.

6.3.2 Establish Recovery Organization.

6.3.2.1 Ballistic Capability

6.3.2.2 Lifting and Ballistic Capability.

6.4 The development of the ballistic recovery capability requires the following action, facilities, and resources above those presently in existence:

6.4.1 Prince Albert Tracking Station.

6.4.1.1 Negotiate for use of site.

6.4.1.2 Construct Facilities.

...national defense of the United States within the meaning of the Espionage Laws ... which in any manner to an unauthorized person is prohibited by law.

6.4.1.3 Acquire necessary telemetry equipment.

6.4.1.4 Man the site.

6.4.1.5 Establish intra and inter communications.

6.4.1.6 Install and check-out.

6.4.1.7 Train personnel.

6.4.2 Guaymas Tracking Station.

6.4.2.1 Negotiate for use of site.

6.4.2.2 Establish intra and inter communications.

6.4.2.3 Train personnel.

6.4.3 Wendover Retrieval Site.

6.4.3.1 Obtain Joint-Tenancy Agreement.

6.4.3.2 Activate facilities.

6.4.3.3 Establish intra and inter communications.

6.4.3.4 Man the site.

6.4.3.5 Train personnel.

6.4.3.6 Establish Air Rescue Service Helicopter Support.

6.4.4 Edwards Interim RCC.

6.4.4.1 Establish intra and inter communications.

6.4.4.2 Man the site.

6.4.4.3 Train personnel.

6.4.5 Ship - Contingency alternate for Guaymas site.

6.4.5.1 Schedule existing telemetry for alternate emergency re-entry South to North.

6.4.5.2 Install tracking capability (if required by later program review).

6.4.5.3 Establish communication.

This document is subject to the Espionage Laws, Title 18 ... the United States within the meaning of the Espionage Laws ... any manner to an unauthorized person is prohibited by law.

6.5 The development of a limited capability for recovery of Gemini/Apollo type vehicles requires the following action, facilities, and resources above those presently in existence:

6.5.1 Edwards Interim RCC.

6.5.1.1 Establish inter communications with applicable MCC's.

6.5.1.2 Augment personnel.

6.5.1.3 Train personnel.

6.5.2 Holloman ROC.

6.5.2.1 Schedule support.

6.5.2.2 Establish communications.

6.5.2.3 Man the ROC.

6.5.2.4 Train personnel.

6.5.3 Edwards ROC.

6.5.3.1 Schedule support.

6.5.3.2 Establish communications.

6.5.3.3 Man the ROC.

6.5.3.4 Train personnel.

6.6 The development of the lifting recovery capability requires the following action, facilities and resources above those presently in existence:

6.6.1 Australia Area Ship.

6.6.1.1 Schedule programmed ship.

6.6.1.2 Establish communications.

6.6.2 Perth Tracking Site.

6.6.2.1 Negotiate for use of site.

6.6.2.2 Schedule support.

6.6.3 Darwin - Manus Area Tracking Site.

...national defense of the United States within the meaning of the Espionage Laws ... which in any manner to an unauthorized person is prohibited by law.

6.6.3.1 Survey and negotiate for use of site.

6.6.3.2 Construct facilities.

6.6.3.3 Acquire necessary equipment.

6.6.3.4 Install and check out.

6.6.3.5 Establish communications.

6.6.3.6 Man the site.

6.6.3.7 Train personnel.

6.6.4 Kwajalein Tracking Site.

6.6.4.1 Establish communications.

6.6.4.2 Schedule support.

6.6.5 Midway Tracking Site.

6.6.5.1 Obtain Joint-Tenancy Agreement.

6.6.5.2 Construct facilities.

6.6.5.3 Acquire necessary equipment.

6.6.5.4 Install and check out.

6.6.5.5 Establish communications.

6.6.5.6 Man the site.

6.6.5.7 Train personnel.

6.6.6 Kaena Point.

6.6.6.1 Schedule support.

6.6.7 Kauai Tracking Site.

6.6.7.1 Obtain Joint-Tenancy Agreement.

6.6.7.2 Schedule support.

6.6.8 Hawaii Area Ship.

6.6.8.1 Schedule existing ship.

...national defense of the United States within the meaning of the Espionage Laws ... which in any manner to an unauthorized person is prohibited by law.

PROGRAM SCHEDULE

TABLE 6-2

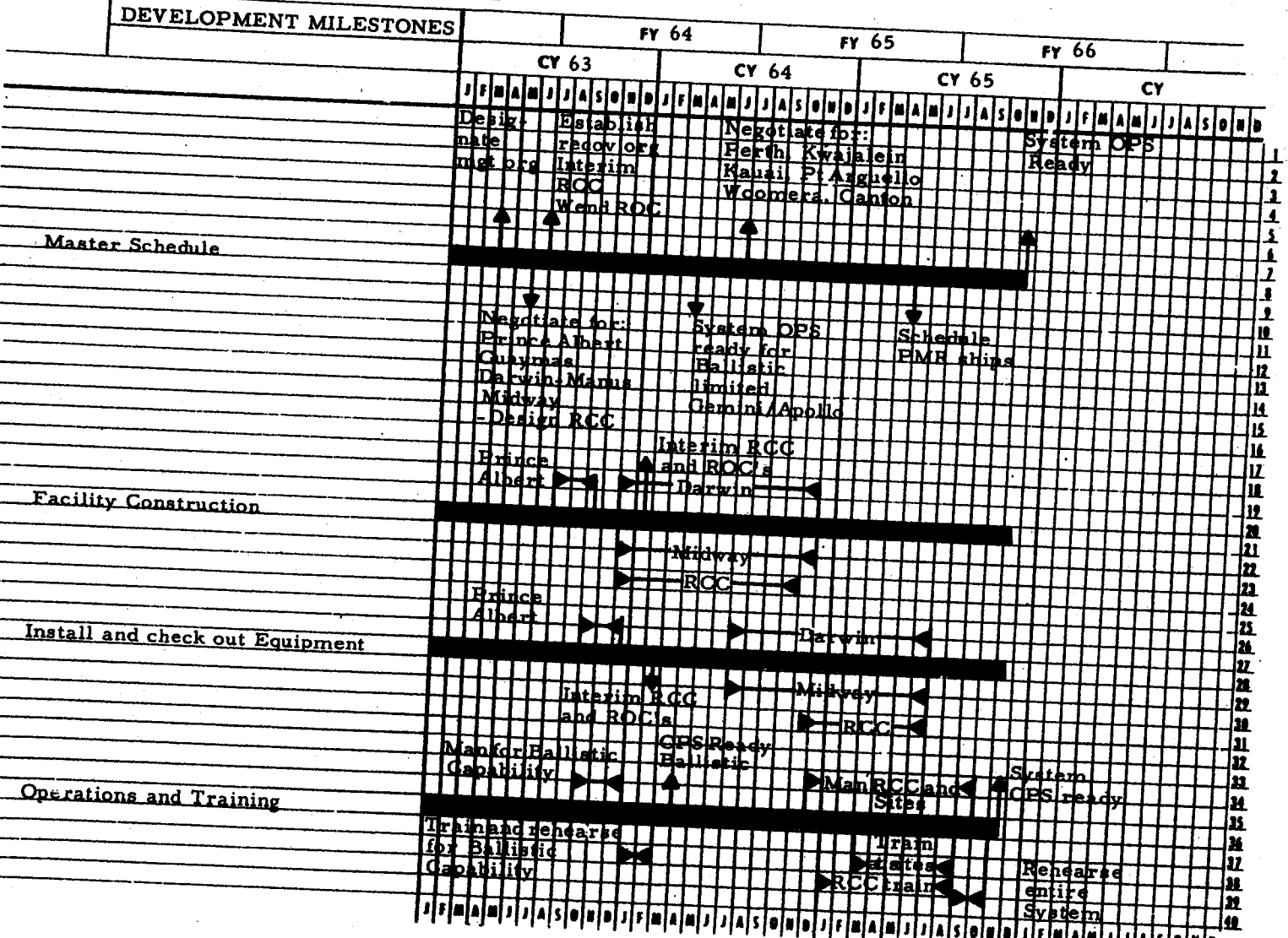

This document contains information affecting the national defense of the United States, within the meaning of the Espionage Laws Title 18, U S C Section 793 and 794, the transmission or revelation of which in any manner to an unauthorized person is prohibited by law.

SECRET

SECTION VII

FINANCIAL

7.1 GENERAL.

The estimated costs in this section are those necessary to implement the work described in this plan. Costs are broken out to correspond with tasks described in Section VI. (Refer to Table 7-1.)

7.2 Existing equipment planned or programmed were utilized to reduce the overall cost of the tasks required to provide a land recovery capability. Two tracking ships are required but were not included as they are a part of the X-20 planned facilities. For ballistic South to North re-entry, if Guaymas, Mexico tracking station support is denied an additional tracking and telemetry ship will be required. The costs are shown in footnote but not included in sub-total costs.

The equipments and facilities required at the RCC are a major reduction of the requirements associated with X-20 and are intended to support the recovery functions only.

7.3 Annual recurring costs for leased and rental equipment and contractor and foreign national personnel is indicated in Table 7-1.

7-4. The costs estimated in Table 7-1 are a minimum overall requirement to implement this plan. If none of the contingencies stated in the document can be accomplished, the additional costs incurred are included in Table 7-2. The contingencies would increase the present total costs from $12,762,000.00 to an estimated maximum cost of $29,932,000.00. It should be noted that neither of these costs include normal operational and maintenance costs nor resupply costs.

This document contains ... Title 18 U S C Sec ... 793 ...

TABLE 7-1

FUNDING REQUIREMENTS

Sec VI, Para No.	Title		Initial Cost (In Thousands)	Recurring Cost (In Thousands)	Foreign National and Contractor Recurring Cost (In Thousands)
6.4.1	Prince Albert Tracking Station				
	Facility	165			
	Equipment-relocate and install	300			
		465	465		
	Communications			71	180
6.4.2	Guaymas Tracking Station		0	67	180
6.4.3	Wendover				
	Equipment		200		
	Communications			2	
6.4.4	Edwards Interim RCC				
	Communications-Voice-Data			21	
6.4.5	Ship Contingency Alternate, Guaymas*		0	0	
	SUB TOTAL, INITIAL BALLISTIC CAPABILITY		665	(161)	
6.5.1	Edwards Interim RCC				
	Communications, Voice and Data to Houston			55	
6.5.2	Holloman ROC				
	Communications - Voice and Data to Edwards			38	
6.5.3	Edwards ROC				
	Communications-Internal		20		
	SUB TOTAL, INTERIM SEMI-GALLISTIC CAPABILITY		20	(93)	
6.6.1	Australian Area Ship				
	Communications, Voice and Data, Perth to Sydney			110	
6.6.2	PERTH Tracking Station		0	0	
6.6.3	Darwin-Manus Tracking Station				
	Facility	380			
	Equipment-Relocate FPS-16	500			
	If Procure	(2500)			
	Telemetry	400	1280		
	Communications			0	
6.6.4	Kwajalein Tracking Station		0	0	380
6.6.5	Midway Tracking Station				
	Facility	324			
	SHF Radar and Telemetry	2500			
		2824	2824		950
6.6.6	Kaena Point Tracking Station		0		
6.6.7	Kauai Tracking Station		0	0	
6.6.8	Hawaii Tracking Ship		0	0	
6.6.9	Point Arguello Tracking Station		0	0	
6.6.10	Woomera Tracking Station		0	0	
6.6.11	Canton Telemetry Station		0	0	
6.6.12	Edwards RCC				
	Facility	795			
	Equipment				
	Data Processing	500			
	Display System	1400			
	Contract Studies and design	1000			
	Communications	500			
	Computer (Rental)		4195		
	SUB TOTAL LIFTING VEHICLE CAPABILITY		8299	1000	
	GRAND TOTAL		8984	1364	1690

* No schedule cost if Guaymas is available-PMR ship available with TM capability, if tracking required 3-million dollars.

This document contains information affecting the national defense of the United States within the meaning of the Espionage Act, Title 18, U.S.C., Section 793 and 794, the transmission of which in any manner to an unauthorized person is prohibited by law.

TABLE 7-2. Total Costs (including alternates)

TOTAL COSTS (INCLUDING ALTERNATES)
IN THOUSANDS

● INITIAL FIXED EQUIPMENT	8984	
● LEASED LINES FOR BALLISTIC -FY-64	364	
● LEASED LINES AND COMPUTER -FY-65	1364	
● FOREIGN NATIONALS -FY-64	360	
● FOREIGN NATIONALS & CONTRACTORS-FY-65	1690	
MINIMUM OVER ALL TOTAL		$12,762
● PROCURE FPS-16 FOR DARWIN	2500	
● INSTALL RADAR ON SOUTHERN PMR SHIP	3000	
● CONTRACTOR COSTS ON PMR SHIP (ADDITIONAL)	270	
● AUSTRALIAN AREA PMR SHIP- COMPLETE (MODIFY, SHF, TCM, CONTRACTOR)	10,000	
● MCP FOR MANUS ISLAND -(ADDITIONAL)	1,400	
MAXIMUM OVER ALL TOTAL		$29,932

THIS HAS:

NO OPERATIONAL AND MAINTENANCE COST
NO RE-SUPPLY COSTS

SECRET

SECRET

SSOR-229
7-3/4

This document contains information affecting the national defense of the United States within the meaning of the Espionage Laws, Title 18 U S C Section 793 and 794, the transmission of which in any manner to an unauthorized person is prohibited by law.

DOWNGRADED AT 3 YEAR INTERVALS, DECLASSIFIED AFTER 12 YEARS. DOD DIR 5200.10

SECRET

THIS DOCUMENT CONTAINS INFORMATION AFFECTING THE NATIONAL DEFENSE OF THE UNITED STATES WITHIN THE MEANING OF THE ESPIONAGE LAWS, TITLE 18 U.S.C. SECTION 793 AND 794. ITS TRANSMISSION OR THE REVELATION OF ITS CONTENTS IN ANY MANNER TO AN UNAUTHORIZED PERSON IS PROHIBITED BY LAW.

APPENDIX A

TYPICAL TELEMETRY STATION

Figure A-1 shows a simplified schematic for a typical telemetry ground station which provides a capability for receiving and tracking a vehicle signal source, detecting, recording and putting the information on a land line in either teletype or 1200 bps data format. The station has the capability of handling any of the modulation formats such as FM/FM PACM or PCM.

The components to the left of Discriminator - Decommutator in Figure A-1 are determined by the frequency that is used between the vehicle and the ground station. If a change is made in the frequency, replacing those components may involve an expenditure of about $400,000.00 per station.

The Table in Figure A-1 is a representative list of the components needed in a station. Components sufficient to equip two ground stations are available from a contract closeout. They are being shipped to Philco's warehouse in Palo Alto, California.

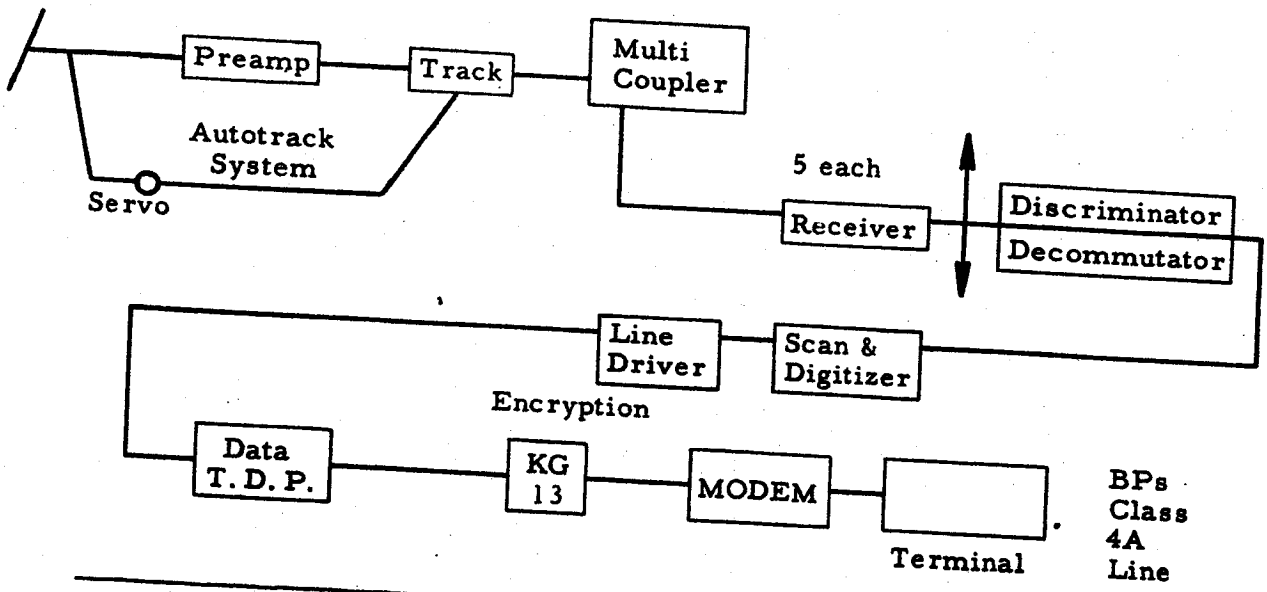

Equipment	Description Number and Make	Number Needed	Price
Quad Helix Disc on Rod	Andrews Canoga with Auto track & mount	1	$300 K
Multicoupler	Nems Clark	1	
Receiver	Nems Clark #1455	5 at $s.5K	10 K
Discriminators	EMR etc.	18 in package	12.5 K
Decommutator	SKG	2 at 100 K ea.	300 K
Scanner & Digitizer	Parsons EMR	1 ea.	200 K
Line Driver	Parsons	5 - $4000	200 K
Data T. D. P.	Philco	1 ea.	20 K
KG-13-NSA			100 K
KW-26 Modem	Collins	30K & 100 K/yr	50 K
Tape Recorder	FR 700 CEC 2800		250 K
Spectrum Display, etc.			25 K

Figure A-1. Typical Telemetry Station

This document contains information affecting the National Defense of the United States within the meaning of the Espionage Laws, Title 18 U.S.C. Sections 793 and 794. The transmission or revelation of its contents in any manner to an unauthorized person is prohibited by law.

APPENDIX B

AIRBORNE INSTRUMENTATION PLATFORM

One approach to instrumentation that should be investigated further is the use of aircraft as mobile instrumentation platforms. The high mobility and the extension of the line of sight distance by the aircraft altitude is a desirable capability. For example, radar in an aircraft at 40,000 ft would have a line of sight coverage about 250 miles greater than the same radar on the ground below.

There could be two approaches to providing positional accuracy for the aircraft. One method would be to rely on aircraft navigation equipment which can provide location accuracy to within .3 miles. Another method would be to keep the aircraft within range of a tracking radar. Using the second method would give positional accuracy to within five hundred feet or less in relation to the radar set.

Accuracy of position would be very important to acquisition of targets on which directional antennas are to be used. The problems of accuracy of results, acquisition, and communication will have to be investigated.

This document contains information affecting the national defense of the United States within the meaning of the Espionage Laws Title 18 U S C. Section 793 and 794, the transmission of which in any manner to an unauthorized person is prohibited by law