206

PROGRAM REPORT

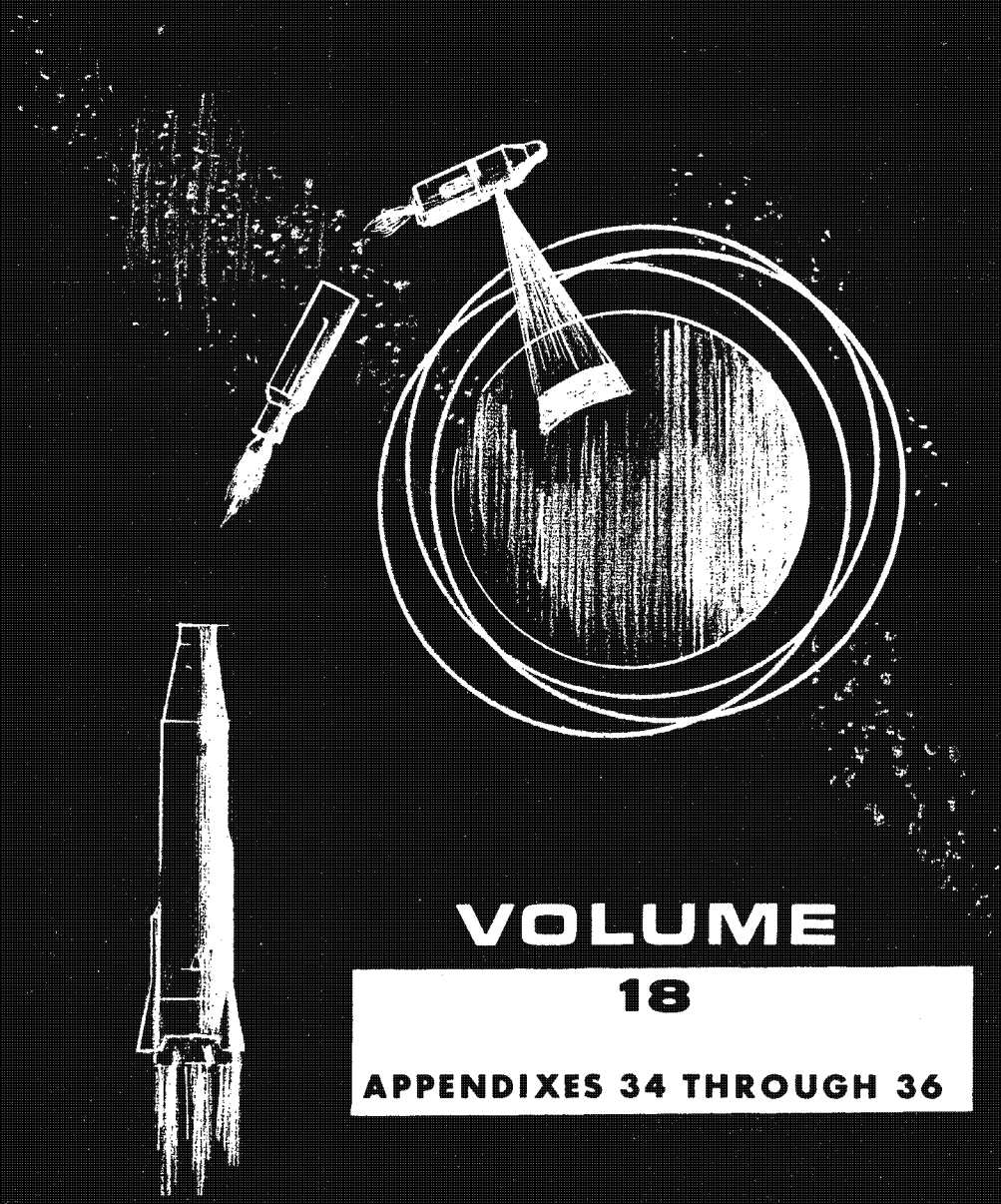

VOLUME 18

APPENDIXES 34 THROUGH 36

THIS DOCUMENT CONTAINS 239 PAGES
NOVEMBER 1967

206

PROGRAM REPORT

VOLUME 18

APPENDIXES 34 THROUGH 36

CONTENTS

APPENDIX 34

ORBITAL REQUIREMENTS DOCUMENT

REVISION FOR T-80 AND SUBSEQUENT

DIN: 6498-46-1
31 MAY 1966

THIS DOCUMENT CONTAINS 16 PAGES.

ORBITAL REQUIREMENTS DOCUMENT

REVISION FOR T-80 AND SUBSEQUENT

GENERAL ELECTRIC

SPECIAL MILITARY SPACE PROJECT
MISSILE AND SPACE DIVISION
KING OF PRUSSIA PARK
P.O. BOX 8661, PHILADELPHIA 1, PA.

LIST OF EFFECTIVE PAGES

This document contains 16 pages, consisting of the following:

Title

A

1 through 14

The following changes are required to update the Program 206 Orbital Requirements Document for T-80 and subsequent:

Page 210 Article 13A TLM Transmission
Add: FM/FM 242.0 MC

Article 13B Beacon Transmission
Add: RV Beacon 235.0 MC

Change: 2850 & 2920 to: 2845 to 2925

Page 220 Article 12A Rated Life, Time in Orbit
Change: 5 days to: 7 days
(Three places)

Page 440 Article 11A Radiated Power (Watts)
Change: 8-12 to: 5 min. (2 places)
Change: 1.5-2 to: 1.5 min.

Article 11B Type/Location of Antenna
Change: - cavity back helix bottom only
To:- flush mounted stub sta 79.4 185°

Page 460 Article 11A Frequency
Change: 2920 ±5 MC
To: 2845 to 2925 MC

Article 11C Type
Change: cavity-backed helix
To: flush mounted stub

Article 11C Frequency Range
Change: 2850 ±5 MC 2920 ±5 MC
To: 2845 to 2925 MC

Article 11B Pattern Characteristics
Change: linear
To: circular

Page 461 Article 10D
Change: separation between transmitter & receiver from 45 to: 50 MC
Change: transmitter warm-up time from 1 to: 2 minutes
Change: receiver warm-up time from 1 to: 2 minutes

Article 11A
Change: [X] from fixed tuned to tunable

Article 11B Emission
Add: pulse

Article 11C
Change: frequency range
From: 2920 MC to: 2845 to 2925 MC
Change: stability
From: ±2 MC/24 hrs to ±0.1 MC/C°

Article 11E Power Output
Change: average watts
From (0.2 to 2) to: 0.2 at 410 P.P.S.
Change: Peak pulse
From 1000 watts to 1000 min. watts

Article 12A Type
Change: fixed tuned to: tunable

Article 12C Frequency
Change: range from 2850 to: 2845-2925 MC
Change: stability from ±5 MC to: ±2 MC
Change: method of control from tuned circuit to: pre-selected cavity

Article 12D Selectivity (overall)
Change: 40 db 35 MC max
To: 20 db 37 MC max

Page 611 Article 12
Delete: (&36) from 5, 11, 9, & 36μs pulse time have tolerance of
Add: (36 μs pulse time has tolerance of ±0.05 μs)

Page 612 Block II Telemetry
Delete: entire drawing and insert new drawing (see attachment I)

Page 612.1 System Description: BUSS Control & Telemetry
Change: from

Receiver Type I 100 to 150 MC Range	To:	Receiver Type I 137.64 MC

Change: SCO Base 8 as below

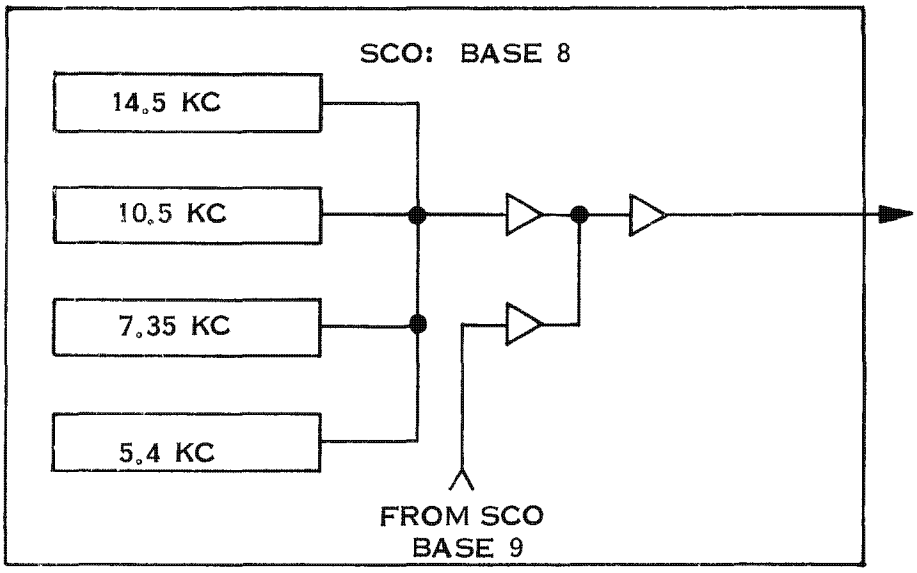

Page 620 Article 10B Transmitter Capabilities
Change: 8 watts to: 5 watts min.

Article 10C Frequency Capabilities
Change: ±180 KC min. to: ±150 KC min.

Article 11B Subcarrier Center Freq. & Dev.
Add 10.5 KC (to present list)
Change deviation from 7.5% to: 7.2%

Article 11C Sampled data signals
Change in note: From: ±7.5% to: ±7.2%

Article 12H Sighting
Add to location of antenna
Add: at 166°

Page 620.1 Article 10B
Change effective radiated power from: 8 watts to: 5 watts min.

Article 10C Frequency Capabilities
Change Deviations
From: max ±180 KC
To: max ±120 KC

Article 11B Continuous measurement signals
Add 10.5 KC
Change ±7.5% deviation to: ±7.2% deviation
Change number of measurements from 7 to 9

Article 11C Sampled Data Signals
Change note at bottom
From: ±7.5% to: ±7.2% (2 places)

Page 620.1 Telemetry Transmission Characteristics

Add to title: Bases 6, 8, & 9

Article 10B Transmission Features
Change effective radiated power
From: 8 watts to: 5 watts min.

Article 10C Frequency Capabilities
Change Deviations from: ±180 KC to: ±120 KC

Article 11B Continuous Measurement Signals
Add to subcarrier center freq. & dev.
2.3 KC, 3.0 KC, 3.9 KC, 5.4 KC, 14.5 KC, 30 KC, 70 KC, 93 KC
Change ±7.5% deviation to: ±7.2% deviation

Article 11C Sampled Data Signals
Change ±7.5% to: ±7.2%

Article 12H Sighting
Add after station 57: at 204°

Page 620.2 Telemetry Transmission Characteristics
Change title from: (Bases 1 and 3)
To: (Bases 1, 2, & 3)

Article 10B Transmission Features
Change Effective radiated power
From: 8 to 12 watts
To: 5 watts min.

Article 10C Frequency Capabilities
Change deviations
From: ±180 KC to: ±120 KC

Article 11B Continuous Measurement Signals
Add to note: 10.5 KC, 14.5 KC, 52.5 KC, 70 KC
Change deviation from: ±7.5% to: ±7.2%

Article 11C Sampled Data Signals
Delete: 3 KC & ±6.5%
Add: 30 KC, 40 KC
Change: ±7.5% to: ±7.2%

Article 12H Sighting
Add after station 57: at 204°

Page 620.3 Telemetry Transmission Characteristics (SRV TM)

Article 10B Transmission Features
Change from: 1.5-2 watts
To: 15 watts min.

Article 10C Frequency Capabilities
Change deviation from: ±60 KC to: ±6.0 KC

Article 10D Band Width
Change: 100 KC to: 114 KC

Article 11B Continuous Measurement Signals
Delete: ±6.5% deviation
Add: deviation (after ±7.0%)

Article 12B Type
Add: 1/4 wave stub

Article 12H Sighting
Add after station 38: at 130°

Page 630 Special Station Telemetry Receiving Requirements
Article 10.1 Time Comparison
Change: ±7.5% to: ±7.2%

Article 10.2 Command Functions
Change: ±7.5% to: ±7.2% (3 places)

Article 12.1
Change: cape to: tape

6498-46-1

Satellite Measurements - System Requirements

Page 640
Dated

Program Title	Program Req. No.	System Code	Contractor Contract Number
Program 206	None	75664014	AF 04(695)-469

Band	Meas. Code	Sensor Type	Measurement Range	Accuracy	Priority	Sampling Rate	Proposed Schedule of Transmission &/or Storage	Special Requirements (Unique Transducer Req.) Output Ranges
6	1.7	Volt. Div.	Event		C	Continuous	Orbital Real Time & Rec. (Link 2) (Link 3P)	Command Decoder Busy Signal
7	2.3	Rate			B			Gyro Roll Rate - Fine
8	3.0	Rate	±.05 deg/sec		B			Gyro Pitch Rate - Fine
9	3.9	Rate			B			Gyro Yaw Rate - Fine
10	5.4	Volt. Div.	Event		C		Orbital (Real Time 3)	"P" axis valves
11	7.35	Volt. Div.	Event		A		Orbital Real Time & Rec (Link 2) (Link 3P)	Delay line erase monitor/ Program word line monitor
		IR Current	0-50 Amps		B/C		Orbital Record (Link 3P)	or L.H. Pre-amp or current of battery total
		Volt. Div.	Event		C		Orbital Real Time Link 3	"Q" axis valves
12	10.5	IR	-		B		Orbital Real Time & Rec. (Link 2) (Link 3P)	R.H. Pre-amp
		Volt. Div.	Event		C		Orbital Real Time (Link 3)	"R" Axis valves
13	14.5	Current	0-50 Amps		C/C		Orbital real time & Rec. (Link 2) (Link 3P)	Current OP battery or tape speed compensation
14	22.0	IR	-		B		Orbital Real Time (Link 3)	L.H. Pre-Amp
16	40.0	IR	-		B			R.H. Pre-Amp
17	52.5	Volt. Div.	Event		A		Orbital Real Time (Link 2) (Link 3)	Command Verification Command Verification (Backup)
18	70.0	Digital	Event		B		Orbital Real Time (Link 2)	Vehicle Clock Time

6498-46-1

Satellite Measurements - System Requirements

Page 640.1
Dated

Program Title	Program Req. No.	System Code	Contractor/Contract Number
Program 206	None	75664014	AF 04(695)-069

Band	Meas. Code	Sensor Type	Measurement Range	Accuracy	Priority	Sampling Rate	Proposed Schedule of Transmission &/or Storage	Special Requirements (Unique Transducer Req.) Output Ranges
	Pin							
10	1	Volts. Div.	-		-	1 per 18 sec.	Orbital Real Time & Rec. (Link 2) (Link 3P)	Calibration - 10%
(5.4)	2	Volts. Div.	-		-			Calibration - 50%
	3	Volts. Div.	-		-			Calibration - 100%
	4	Temp.	-80 to + 200°F		D			Temp. Thrust Cone (R. R.)
	5	-	-		-			GFE 1-24
	6	-	-		-			GFE 1-32
	7	-	-		-			GFE 1-1
	8	Temp.	162.5 to 167.5°F		D			Temp., TARS Platform Roll
	9	Temp.			D			Temp., TARS Platform Pitch
	10	Temp.			D			Temp., TARS Platform Yaw
	11	Voltage	22.8 to 29.2 VAC		D			Voltage Drive Rate Gyro 400 CPS
	12	Temp.	0 to 130°F		-			Temp. Section 5 Heater
	13	Voltage	0 to 70 VDC		C			DC Power supply Q4 Peak Detector
	14	Voltage	0 to 28 VDC		C			DC power supply + 26.5 VDC
	15	Pressure	0 to 100 PSIA		D			Pressure Reg. - Low Output
	16	Pressure	0 to 600 PSIA		D			Pressure Reg. - High Output
	17	Temp.	0 to 130°F		B			Temperature Section 5 Heat
	18	Temp.	0 to 130°F		B			Temperature Capsule
	19	Voltage	0 to 24.5 VDC		C			22 VDC Monitor
	20	Temp.	50 to 100°F		C			Temperature, TARS Elec. - Int.
	21	Voltage	25 to 27 VAC		C			TARS Gyro Wheel Power
	22	Temp.	0 to 130°F		B			Temperature, Section 5 Heater
	23	Temp.	0 to 130°F		-			Heater Temperature, Section 5
	24	Temp.	0 to 130°F		-			Heater Temperature, Section 5

Satellite Measurements - System Requirements

Page 640.2
Dated

Program Title	Program Req. No.	System Code	Contractor/Contract Number
Program 206	None	75664014	AF 04(695)-469

Band	Meas. Code	Sensor Type	Measurement Range	Accuracy	Priority	Sampling Rate	Proposed Schedule of Transmission &/or Storage	Special Requirements (Unique Transducer Req.) Output Ranges
	25	Temp.	0-5 VDC		-	1 per 18 sec.	Orbital Real Time & Rec. (Link 2) (Link 3P)	Temperature Degree "C" (P7)
	26	Temp.	0-130°F		D			Temp. Vehicle Structure
	27	Spare	-		-			5 VDC
	28	Temp.	0-130°F		D			Temp. inside Insulation.
	29	-	-		B			GFE 2-2
	30	Voltage	0-15.5 VDC		C			Voltage, H-30 Battery No.
	31	Temp.	-80 to +200°F		D			Temp. Gyro Block
	32	Rate	±.05 deg/sec		C			Gyro Yaw Rate - Fine
	33	Temp.	-80 to +200°F		D			Temp. STA-209 Buckhead
	34	Temp.	0 to 130°F		D			Temp. TARS Elec., Fin
	35	Voltage	0-5 VDC		-			Command Deploy Monitor (P7)
	36	Temp.	-76 to + 320°F		D			Temp. Battery No. 6
	37	Temp.	-80 to +200°F		D			Temp. OCV Skin
	38	Temp.	-80 to +200°F		D			Temp. OCV Skin
	39	Temp.	-80 to +200°F		D			Temp. OCV Skin
	40	Temp.	-80 to +200°F		D			Temp. OCV Skin
	41	Temp.	-80 to +200°F		D			Temp. OCV Skin
	42	Temp.	-80 to +200°F		D			Temp OCV Skin
	43	-	-		-			FET No. 9
	44	Temp.	-80 to +200°F		D			Temp. Delta II Transmitter
	45	-	-		-			FET No. 10
	46	-	-		-			Calibration 100%
	47	-	-		-			Calibration 50%
	48	-	-		-			Calibration 10%
	49	Temp.	0-130°F		D			Temp. inside insulation
	50	Temp.	0-130°F		D			Temp. inside insulation
	51	-	-		C			GFE 1-4
	52	-	-		C			GFE 1-6
	53	-	-		C			GFE 1-7
	54	-	-		C			GFE 1-8

Approved for Release: 2024/01/30 C05099027

Satellite Measurements - System Requirements

Page 640.3
Dated

Program Title	Program Req. No.	System Code	Contractor/Contract Number
Program 206	None	75664014	AF 04(695)-469

Band	Meas. Code	Sensor Type	Measurement Range	Accuracy	Priority	Sampling Rate	Proposed Schedule of Transmission &/or Storage	Special Requirements (Unique Transducer Req.) Output Ranges
	55	-	-		C	1 per 18 sec	Orbital Real Time & Rec. Link 2	GFE 1-9
	56	-	-		C			GFE 1-10
	57	-	-		C			GFE 1-5
	58	Digital	Event		C			Recorder Counter (LSD)
	59	Digital	Event		C			Recorder Counter
	60	Digital	Event		C			Recorder Counter (MSD)
	61	Pressure	0-5000 PSIA		C			Pressure, OCV N_2 Reg. Inlet
	62	Temp.	0-130°F		D			Temp, Decoder Programmer Plate
	63	Temp.	-80 to + 200°F		D			Temp, Adapter Skin
	64	Temp.	-80 to +200°F		D			Temp, Adapter Skin
	65	Temp.	-80 to +200°F		D			Temp, Adapter Skin
	66	Temp.	-80 to +200°F		D			Temp, Programmer
	67	Temp.	77 to 284°F		C			Temp, DC Power Supply Q3
	68	Temp.	77 to 284°F		C			Temp, DC Power Supply Q4
	69	Voltage	-22 to -27 VDC		C			DC Power Supply -24.5 VDC
	70	Voltage	26 to 33 VDC		C			Regulator 28 VDC
	71	Rate	±.05 deg/sec		C			Gyro Roll Rate - Fine
	72	-	-		B			GFE 1-26
	73	Temp.	-80 to +200°F		D			PB #6
	74	Temp.	-80 to +200°F		D			Temp. Adapter Skin
	75	Temp.	-80 to +200°F		D			Temp. Adapter Skin
	76	Temp.	-76 to +320°F		D			Temp. Battery #5
	77	Temp.	-80 to +200°F		D			Temp. AFT Equip. Structure
	78	Temp.	-80 to +200°F		D			Temp. Δ3 Trans. Mtg. Plate
	79	Temp.	-80 to +200°F		D			Temp. Δ3 Transmitter
	80	Temp.	-76 to +320°F		D			Temp. Battery No. 1
	81	Temp.	-76 to +320°F		D			Temp. Battery No. 2
	82	Temp.	-76 to +320°F		D			Temp. Battery No. 3
	83	Temp.	-76 to +320°F		D			Temp. Battery No. 4
	84	Temp.	-80 to +200°F		D			Temp. Signal Data Recorder
	85	Rate	±.05 deg/sec.		D			Gyro Pitch Rate - Fine
	86	Temp.	0 to +130°F		D			Temp. Structure Adapter
	87	Spare	5 VDC		-			Spare
	88	Temp.	0 to +130°F		D			Temp. Hot Gas Solenoid Valve
	89	Volt. Div.	-		-			Frame Sync.
	90	Volt. Div.	-		-			Frame Sync.

Approved for Release: 2024/01/30 C05099027

Satellite Measurements - System Requirements

Page 640.4
Dated

Program Title	Program Req. No.	System Code	Contractor/Contract Number
Program 206	None	75664014	AF 04(695)-469

Band	Meas. Code	Sensor Type	Measurement Range	Accuracy	Priority	Sampling Rate	Proposed Schedule of Transmission &/or Storage	Special Requirements (Unique Transducer Req.) Output Ranges
	10.5							
12	1	Volt. Div.	-		-	1 per 2.5 sec.	Orbital Real Time & Rec. (Link 2) (Link 3P)	PB #1
	2	-	-		B			GFE 1-29
	3	-	-		A			GFE 1-21
	4	-	-		A			GFE 1-30
	5	Volt. Div.	-		-			Calibration 10%
	6	-	-		B			GFE 1-11
	7	Digital	Events		C			Recorder Counter - LSD
	8	-	-		A			GFE 1-22
	9	-	-		A			GFE 1-31
	10	-	-		B			GFE 2-15
	11	-	-		B			GFE 1-18
	12	-	-		A			GFE 1-23
	13	-	-		A			GFE 1-33
	14	Digital	Events		C			Recorder Counter
	15	Volt. Div.	-		-			Calibration - 50%
	16	Temp.	0 to +130°F		B			Temp. Recovery Battery
	17	-	-		A			GFE 1-34
	18	-	-		A			GFE 1-21
	19	Volt. Div.	-					Yaw Torque On
	20	Digital	-					Recorder Counter (MSD)
	21	Pressure	0 to 350 PSIA					Pressure, OCV Oxidizer
	22	Pressure	0 to 350 PSIA					Pressure, OCV Fuel
	23	Temp.	76 to 320°F					Temp. Stagnation Point
	24	-	-					GFE 1-35
	25	Volt. Div.	-					Calibration 90%
	26	Temp.	0 to 130°F					Yaw operating monitor/ Cal monitor (P77)
	27	Volt. Div.	-					Computer Events
GE	28	Volt. Div.	Event		B			Computer Phasing
	29		-		-			Frame Sync
640.5	30	Volt. Div.	-		-			Frame Sync

Page 740.4 Primary Command Format

Change Function

From: OCV Spin-up to: arm

From: H30 arm to: Buss remote execute

Change Resulting Action

From: - Spins OCV

To: - turns on H30 TM, turns on H30 beacon, and arms recovery programmer.

From: - turns on H30 TM, turns on H30 beacon, and arm recovery programmer.

To: - executes Buss in real time mode if Buss in enabled.

Page 740.8 Primary Command Format

Change Under Function

From: ACA off & Spin-up enable

To: ACA off & Buss enable

From: ACA off and spin-up disable

To: ACA off and Buss disable

From: RH IR pre-amp Record

To: GFE 1-C15 on

From: RH IR Pre-Amp

To: GFE 1-C15 off

Add under BIT Format

71-0 after 71-1

Change under resulting action

From: (DSPC-5 bit 62) and spin-up on

To: (DSPC-5 bit 62) and Buss on

Delete under Resulting Action

Delete: - Connects RH IR to 10.5 KC S.C.O. and disconnects 30 x 2.5 multiplexer

Delete: - Disconnects RH IR from 10.5 KC S.C.O. and connects 30 x 2.5 multiplexer.

Page 740.11 Primary Command Format

Change Under Function

From: OCV spin-up off

To: space

From: space to: GFE 1-C17 on (opposite bit 52-1)

From: spare to: GFE 1-C17 off (opposite bit 52-0)

From: spare to: GFE 1-C18 on (opposite bit 53-1)

Add: GFE 1-C18 off (opposite bit 53-0)

From: GFE 1-C15 on to: IR pre-amp
From: GFE 1-C15 off to: total current record
Add: spare (opposite BIT 54)
From: FEC 3-1 to: spare
From: FEC 3-0 to: spare

Add Under BIT Format
Add: 53-1 and 53-0 (opposite GFE 1C18 on, off). Move 54 to opposite spare channel.

Change Under Resulting Action
Delete: OCV spin-up off
Delete: nothing (opposite 52-1 & 52-0)

Page 740.12 Primary Command Format
Change Under Function
From: FEC 4-1 to: Spare
From: FEC 5-1 to: Spare
From: FEC 5-0 to: Spare
From: H30 arm to: RV/OCV Sep.
From: S/A 3 & 4 to: Disconnect #2
From: Adapter/SRV to: OCV Eng.

Change Under Resulting Action
Delete: to be used as required by experiments (2 places)
From: - turn on T/C battery in capsule
To: Separates SRV from OCV by firing pin puller squibs

From: - Activates S/A 3 & 4
To: activates disconnect functions
From: - separates SRV from OCV firing pin puller squibs
To: cut off/norm

Page 640.5
Band 14 Pin 4 change priority from: C to: B
Change special requirements from: TT&C command Decoder Busy
To: PB No. 2

Page 640.6 and B and 15
Change the following pins to read as below (pins 1, 2, 3, 9, 13, 14, 17, 21, 27)

Pin	Sensor Type	Measurement Range	Priority	Spec. Req.
1	Volt Div.	0-5 VDC	-	Feedback (P77)
2	Volt Div.	0-5 VDC	-	Ion Density Current Feedback (P77)
3	Voltage	0-24.5 VDC	C	22 VDC Monitor
9	-	-	-	GFE 1-26
13	Voltage	0-5 VDC	-	HVPS (P77)
14	Voltage	0-5 VDC	-	10 CPS (P77)
17	-	-	B	GFE 2-2
21	Current	0 to 10 A	B	EP&SD Current Op Battery No. 2 & 6
27	Voltage	0-5 VDC	-	LVPS Monitor (P77)

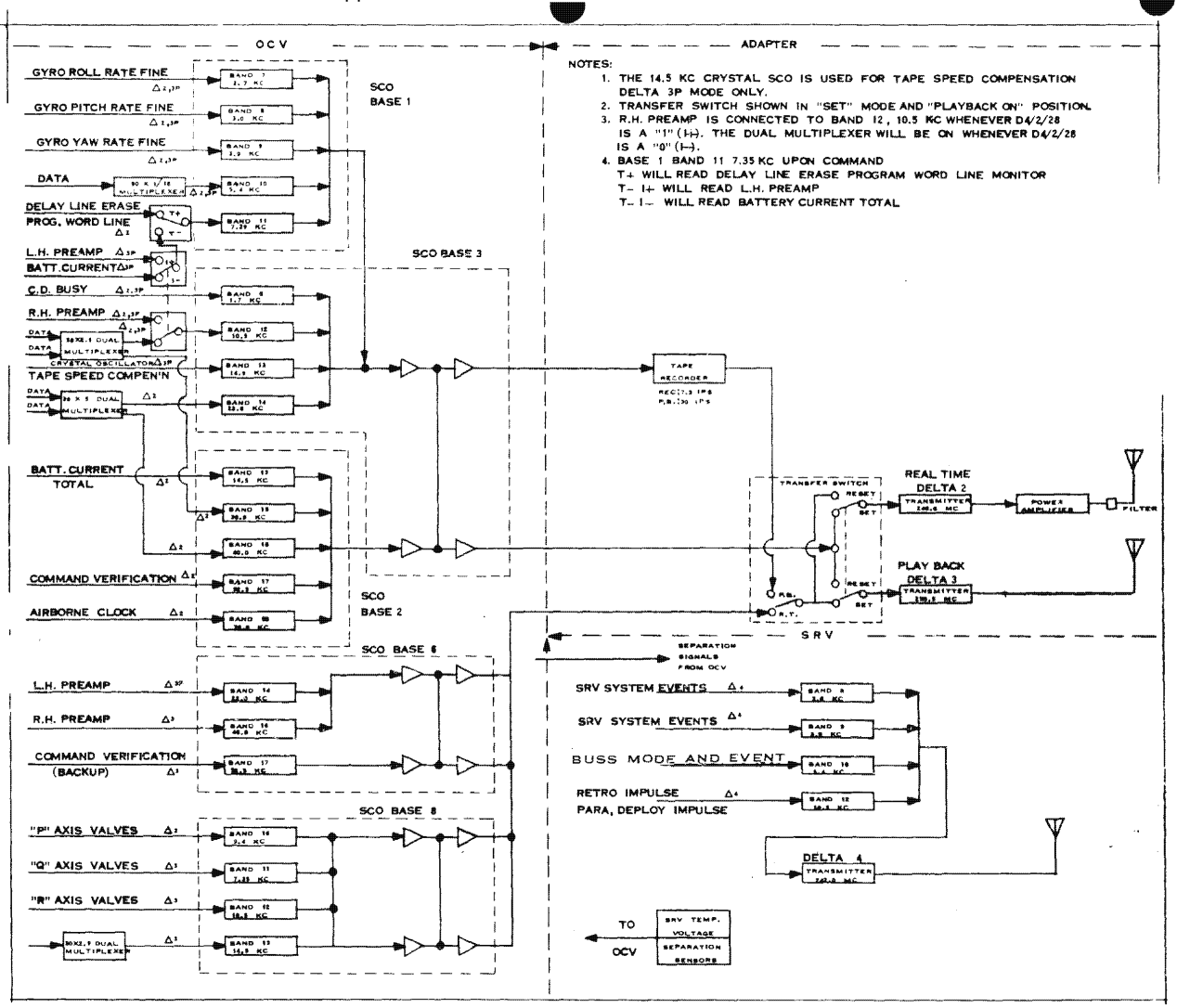

Attachment 1. Telemetry Subsystem Block Diagram

APPENDIX 35

INTERFACE SPECIFICATION

Document No. 3737-72-3

No. of Pages 143

GENERAL ELECTRIC CO. - EASTMAN KODAK CO.

INTERFACE SPECIFICATION

GE # SVS 105Z/EK #502-146 (Rev. G)

DECEMBER 1, 1966

Responsibility for maintenance of this document rests with the General Electric Company.

(F-11)

LIST OF EFFECTIVE PAGES

This document contains 143 pages, consisting of the following:

*REVISION & EFFECTIVITY SCHEDULE

The table below defines the effectivity of this Interface Specification and all related alteration notices, revisions, or supplements.

REV. LTR.	REVISION DATE	INCORP. AN NOS.	EFFECTIVITY SV	EFFECTIVITY FM	SUPPL. NO./DATE	EFFECT. SV	EFFECT. FM
G	12/1/66	F-1	Not approved				
		F-2	972 & subs.	22 & subs.			
		F-3	Not approved				
		F-4	982 & subs.	33, 34 & 35 only			
		F-5	975 & subs.	25 and subs.			
		F-6	982 & subs.	32 & subs.			
		F-7	980 & subs.	30 & subs.			
		F-8	980 & subs.	30 & subs.			
		F-9	980 & subs.	30 & subs.			
		F-10	987 & subs.	38 & subs.			
		F-11	987 & subs.	38 & subs.			

*When a change which affects a limited number of SV's or FM payloads is approved by both EK and GE, a specification supplement applicable only to those specific units will be issued.

TABLE OF CONTENTS

TABLE OF CONTENTS

TABLE OF CONTENTS

TABLE OF CONTENTS

TABLE OF CONTENTS

TABLE OF CONTENTS

LIST OF TABLES

LIST OF ILLUSTRATIONS

SECTION 1

PURPOSE

This specification defines the interfaces which exist between the Eastman Kodak Co. (EK) and the General Electric Co. (GE) on Program 206. This specification is the primary GE-EK interface document on Program 206 and all other interface documents referenced herein are part of this specification. Responsibility for maintenance of this document rests with the General Electric Co.

1.1 NOMENCLATURE

The following definitions shall apply:

1.1.1 SATELLITE VEHICLE (S/V)

The Satellite Vehicle consists of the complete assembly of the Payload Vehicle and the Camera Payload.

1.1.2 CAMERA PAYLOAD (C/P)

The Camera Payload portion of the Photographic Subsystem consists of the flight equipment required to collect visual information on a photographic film, to transport and store this film in the SRV (except for the film chute between the supply cassette and the forward record storage assembly) and the necessary C/P electrical equipment.

1.1.2.1 Camera Payload Retrieval Components

The Camera Payload Retrieval Components are those Camera Payload components located in the SRV.

1.1.3 PAYLOAD VEHICLE (P/V)

The Payload Vehicle consists of the Orbit Control Vehicle, the Satellite Vehicle Adapter, and the Satellite Re-entry Vehicle whenever they are connected into one unit.

1.1.3.1 Orbit Control Vehicle (OCV)

The OCV is that portion of the P/V which establishes structural continuity between the Satellite Boost Vehicle and the Satellite Vehicle Adapter. The OCV houses the Camera Payload, the satellite programmer, the battery power supplies, and other subsystems.

1.1.3.2 Satellite Vehicle Adapter (SVA)

The Satellite Vehicle Adapter is that portion of the P/V which joins the SRV to the OCV, contains the telemetry instrumentation and communication subsystem, and contains the record chute from the OCV to the SRV with required thermal environmental control.

1.1.3.3 Satellite Re-Entry Vehicle (SRV)

The Satellite Re-Entry Vehicle is that portion of the P/V which houses the recoverable capsule, forward record storage assembly with exposed film, the SRV de-orbit propulsion, telemetry and retrieval subsystems. The SRV forebody protects the subsystems during descent from orbit through re-entry into the earth's atmosphere to parachute deployment. The recovery capsule protects the exposed film and retrieval aids from parachute deployment through air-snatch or water impact and recovery.

1.1.4 PHOTOGRAPHIC SUBSYSTEM

The photographic subsystem consists of the Camera Payload and associated EK-AGE. Photographic processing equipment is not included.

1.1.5 AEROSPACE GROUND EQUIPMENT (AGE)

The Aerospace Ground Equipment consists of any or all implements or devices which are required to inspect, test, service, adjust, calibrate, appraise, gauge, measure, repair, overhaul, assemble, disassemble, handle, transport, safeguard, record, store, actuate or otherwise maintain the intended functional operating status of an Air Force weapon system, support system, end item or component. This definition includes special tools or test devices, including measuring standards or calibrating instruments, required for support of items of ground operating equipment.

1.1.6 MISSILE ASSEMBLY BUILDING (MAB)

The building at Vandenberg Air Force Base (VAFB) in which the S/V subassemblies are received, tested, serviced, and assembled prior to being transported to the PAD.

1.1.7 POINT ARGUELLO LAUNCH COMPLEX #2 (PALC-2)

That section of Point Arguello from which the Program 206 Satellite Vehicles are launched.

1.1.8 VEHICLE SUPPORT BUILDING (VSB) - Deleted

1.1.9 LAUNCH OPERATIONS BUILDING (LOB)

That building located at PALC-2 in which the equipment for monitoring and controlling the S/V and Satellite Boost Vehicle during terminal countdown and launch is located. This building is manned during terminal countdown and launch.

1.1.10 LAUNCH SUPPORT BUILDING (LSB)

That building at PALC-2 at the base of the launch pad where equipment for transferring information between the S/V and other areas is installed. It shall be manned only until gantry pull back.

1.1.11 SATELLITE TEST ANNEX (STA)

Satellite Control Facility located at Sunnyvale, California.

SECTION 2

APPLICABLE DOCUMENTS

The latest approved revision of the following documents form a part of this specification to the extent described herein:

2.1 GOVERNMENT

MIL-I-26600	Interference Control Requirements, Aeronautical Equipment.
MIL-E-6051C	Electrical-Electronic System Compatibility and Interference Control Requirement for Aeronautical Weapons System, Associated Subsystems, and Aircraft.

2.2 AEROSPACE CORPORATION

JDS-012	Program G Systems Requirements Specification (Aerospace)

2.3 INTERFACE DOCUMENTS - (Maintenance Responsibility for this document rests with the General Electric Company)

GE NUMBER	EK NUMBER	TYPE	TITLE
30S2000	801-116	Dwg.	Payload Interface, GE-EK

2.4 ASSOCIATE CONTRACTORS

2.4.1 EASTMAN KODAK CO. (EK)

502-181	Operating Equipment (T and A Station Ground Equip.)
502-208	Phase II Electrical Simulator
401-104-1	Summary of Payload Parts Fog Test
502-225	EMI

2.4.2 GENERAL ELECTRIC CO. (GE)

SVS 4364	Deviations and Additions to Military Specification MIL-I-26600 as Applicable to Program 206

SECTION 3

DESIGN REQUIREMENTS

This section defines the requirements to which the satellite vehicle shall be designed and fabricated.

3.1 ELECTRICAL

The electrical interface defining the power allocation, command signals, instrumentation signals and connectors (including type, designation, and contact functions), is described herein and in Table 1.

3.1.1 POWER

Electrical power shall be supplied to the camera payload as unregulated +28 volt (nominal) direct current from batteries located in the OCV. The OCV shall also supply the C/P with regulated +5 VDC for instrumentation. The OCV shall supply the operational and environmental power to the C/P via separate electrical busses. The C/P shall provide ±22 volts DC for internal use by regulating the operational +28 volts DC supplied by the OCV. The instrumentation return, the 22 volt DC return, the time data signal return, and the DC return, all indicated in Table 1, shall be electrically isolated within the C/P. Prior to any operation of the C/P these four returns (eight interface wires) shall be made electrically common external to the C/P. The connection shall be made in such a way as to minimize any fluctuations in the instrumentation return and 22 volt DC return levels as a result of non-instrumentation loads on the +28 volt DC supply.

3.1.1.1 Operational Supply (F-7)

The unregulated "+28 volts DC supply" listed in Table 1 shall be the primary power source of the C/P. It shall be used for all functions not specifically assigned to one of the supplies described in the following paragraphs. Assuming normal operation throughout the orbital lifetime, the C/P shall not consume more than an average of 60 watt-hours per day of electrical energy from this supply. Surge current shall not exceed 15 amperes and this transient shall decay to the normal load current in less than ½ second. During the transient, the voltage present at the interface between the supply wires and the DC return wires shall be no less than 25.0 volts and no more than 33.4 volts. Normal load current, during any operating period, shall not exceed 3.5 amperes. Some abnormal events may cause the operational current demand to be greater than the normal 3.5 amperes.

The interface voltage in this case shall vary linearly between the 3.5 ampere voltage level of 26.0 volts and the 15 ampere voltage level of 25.0 volts. With the current so restricted, and with the stipulation that no power from this supply shall be applied to the camera payload prior to the first health check, the voltage present at the interface between the supply wires and the DC wires shall be no less than 26.0 volts and no more than 33.0 volts. Power application shall be controlled by the GE programmer. The C/P shall not be harmed by the application of 33.4 volts. The operational circuits in the C/P shall be isolated from the environmental control circuits except for the common DC return. Common power line impedance of EK and GE subsystems shall be minimized to reduce conducted intra-system interference.

3.1.1.2 Environmental Supply (F-7)

The "+28 volts DC Environmental Supply" listed in Table 1 shall be used for all environmental heaters within the C/P. This supply may also be used for certain C/P instrumentation points. The current drain shall be no more than 3.7 amperes. With the current so restricted, the voltage present at the interface between the supply wires and the DC return wires, shall be no less than 26.0 volts and no more than 33.4 volts. Power shall be available on demand to the environmental control circuits from launch until at least the last programmed C/P operation, which is final film wind-up; at which time these circuits may be disconnected from power by the OCV. Environmental power may be interrupted (e.g. when switching from ground to vehicle power) provided the voltage at the itnerface is below 20 volts no longer than 10 milliseconds during the power transfer. Power shall not be reapplied in less than 400 milliseconds after power turn-off. The environmental power load is approximately 8 ohms in parallel with a maximum capacitance of 1000 pico farads.

3.1.1.3 Instrumentation Supply

The "+5 volts DC supply" listed in Table 1 shall be supplied to the C/P by the OCV and shall be used as defined in Table 2. The current drain shall be no more than 10 milliamperes. With the current so restricted, the voltage present at the interface between the supply wires and the instrumentation return wires shall be no less than 4.9 volts and no more than 5.1 volts. Power application shall be controlled by the GE programmer.

3.1.1.4 Overload Protection

The C/P shall be fused in accordance with the philosophy adopted by EK. All environmental power inputs from GE to the C/P, and the +5 volts DC to the electrical distribution assembly, shall have some form of overload protection within the C/P.

3.1.1.5 Grounding

The C/P shall be electrically connected to the OCV through grounding straps. Resistance per strap installation shall be no greater than one (1) milliohm. All electrical circuitry within the C/P shall be isolated from the C/P payload structure.

3.1.1.6 Shielding

The shield tie-points shown in Table 1 shall be connected to the C/P structure within the C/P. Shields connected to these tie-points by GE shall be electrically isolated within the GE equipment.

3.1.1.7 Electro-Magnetic Interference

The OCV, the SVA, the SRV, the C/P, and associated AGE shall operate satisfactorily, not only independently, but also with each other and in conjunction with other equipment which may be located nearby. Specific EMI requirements for GE are defined by MIL-I-26600, MIL-E-6051, and GE SVS 4364. EK requirements are defined by EK document 502-225. EK shall use as a design goal MIL-I-26600.

3.1.1.8 Magnetic Characteristics

It shall be the responsibility of EK to notify GE of any changes in the C/P which have an effect on magnetic characteristics.

3.1.2 INSTRUMENTATION

3.1.2.1 General

The C/P instrumentation points, "CPL", listed in Table 1 shall be sampled, recorded, and displayed as specified in Table 2 and as required by Section 4. EK shall supply the instrumentation points with the characteristics specified in Table 2.

3.1.2.2 Display and Reduction Requirements (Shall be defined in Table 2)

3.1.2.3 Payload Sensor Voltage

The voltage output of each instrumentation point shall be measured with respect to instrumentation return. The nominal instrumentation output shall be 0.0 to 5.0 volts DC positive. The GE multiplexers shall not be harmed by the application of voltage in the range of 0.25 volts DC negative to +33.4 volts DC positive.

3.1.2.4 Vehicle Data Recorder

The Vehicle Data Recorder referred to in Table 2 will be used to monitor C/P performance during payload operations. This recorder will have the capability of being started and stopped upon command by the vehicle command programmer except during a stereo pair operation or a strip photography operation of the C/P.

3.1.2.5 Accuracy of Data Links

A C/P instrumentation interface voltage shall be defined as the voltage existing at the GE/EK electrical interface between an instrumentation signal wire and the instrumentation return wire when the instrumentation point is being sampled by a GE multiplexer. The Thevenin equivalent load characteristics of the multiplexer shall be within the limits specified in Table 2. The GE telemetry system shall read out, on a permanent record at the tracking stations, the C/P instrumentation interface voltages with a total error not exceeding the limits shown in Figure 3-6.

3.1.2.6 Data Signals

The data signals listed in Table 1 shall be supplied to the C/P by the OCV whenever the C/P is operated. Data signal A shall be a composite signal consisting of a time label signal and a time mark signal as shown in Figure 3-4. Data Signal B shall be a 500 pps timing signal. Timing Pulses on Signals A & B are 180° out of phase. The data signal input and output circuit characteristics shall be as shown in Figure 3-5.

3.1.2.6.1 Time Label Signal

The time label signal shall consist of twenty-three (23) straight binary coded bits with 0.1 second resolution, thus providing an unambiguous time code for approximately 9.6 days. The time label shall be present every 0.8 second. The least significant bit shall be presented first.

3.1.2.6.2 Time Mark Signal

The time mark signal for data signal A shall consist of one pulse presented every 50 milliseconds. The time mark signals shall be coincident with the least significant bit of the time label.

3.1.3 TEST PLUG CIRCUITS

The C/P test points are designated "VTP" on connector J696 and "VP" on connector J695 (see Table 1). The data obtained from these test circuits shall be displayed and recorded by GE as described in Section 4 of this specification and in Table 3.

The electrical characteristics of these test circuits shall be as specified in Table 3.

3.1.4 UMBILICAL CIRCUITS

The C/P umbilical points are designated as "BBT" on connector J698 (see Table 1). The data obtained from these umbilical circuits shall be presented by GE as described in Section 4 of this specification and Table 4. The electrical characteristics of these umbilical circuits shall be as specified in Table 4. These umbilical circuits shall be so designed to ensure that any accidental line-to-line/ line-to-ground faults which might occur during powered flight will not degrade the performance of the C/P.

3.1.5 COMMANDS

The C/P shall receive from the OCV the commands listed in Table 1 at the appropriate times. Each command shall have the characteristics specified in Table 5. The OCV shall also have the capability of independently switching "ON" and "OFF", by command, the operational and environmental power delivered by the OCV to the C/P.

3.1.5.1 Focus Commands (F-9)

Commands CB 15, CB16, CB17, and CB18 shall be used to make focus adjustments. Command CB15 is a stored program command which enables and disables the CB17 and CB18, the manual focus-motor drive commands. Implicit with the CB15 enabling function is a reset of CB16, 17 and 18 to ensure that a single command will not cause the focus motor to drive. Commands CB17 and CB18 are the forward and reverse focus-motor drive commands and may be executed by either Real Time commands or stored program commands.

CB17 and CB18 Real Time Commands - When CB17 or CB18 are being given as real time commands, the total delay time from command initiation at the operating console in the tracking station to command presentation at the OCV/C/P interface shall not exceed 240 milliseconds. The CB17 and CB18 commands when given are sent from the tracking station at approximately 50 milliseconds intervals; each receipt of either command will drive the focus-motor in the C/P for a period of 64 milliseconds when CB15 has been previously given.

CB17-CB18 Stored Program Commands - When CB17 or CB18 are being given as stored program commands, the time selected for focus-motor drive will be the time between the execution of the CB17 or CB18 command and the execution of either a CB15 enable or disable command. Execution times are loaded into storage along with the command and may be selected to be executed immediately upon storage of the complete command, provided a CB15 command has been previously given.

CB16 is the command which switches the control of the focus-motor between automatic and manual command modes.

3.1.5.2 Supply Spool Torque Motor Command

Provision shall be made so the command CB 24, Supply Spool Torque Motor, can be "ON" at the following times:

a. From two minutes prior to launch until completion of the powered flight and orbit injection sequences.

b. During all powered flight portions of orbit adjust maneuvers.

3.2 MECHANICAL

The mechanical interface defining the fastenings (including locations and torquing requirements), dimensional tolerances for the mating surfaces, both the C/P-OCV and the forward record storage assembly - SRV axes alignment tolerances, structural (static and dynamic) loading allowances, mating face materials, camera payload weight, center of gravity, balance and tolerances are described herein and by Drawing 30S2000-I/801-116-I.

3.2.1 STRUCTURAL LOADS

Limit loads applicable to critical phases of the mission are as noted in Section 5. There shall be no yield at limit loads and no failure at 1.25 times limit loads.

3.2.1.1 Inertial Loads

The inertial limit loads which are considered to act through the center of gravity of the C/P for each mission phase (powered flight, re-entry, recovery and impact) are as specified in Section 5.

3.2.1.2 Weight and Balances

EK shall furnish a weight and balance report to GE within ten days after acceptance of each C/P. This report will include measured values of weight and c.g. of the C/P, less FRSA, and of the FRSA and calculated values of moments and products of inertia based on measured weights of major subassemblies. All EK weight and balance data will be referenced to an axis system shown on GE/EK interface drawing series 30S2000/801-116 and having its origin at station 0 in the GE coordinate system unless otherwise noted.

3.2.1.2.1 Weight and c.g. of Complete C/P

The weight and c.g. of the C/P including forward record storage assembly in the launch condition with flight film load shall be as follows:

Weight	1225 lbs. Max.
Longitudinal	Station 137.0 ±3 inches
Radial	Vertical (z) axis 0 ±0.5 inch
	Horizontal (y) axis 0 ±0.5 inch

3.2.1.2.2 Weight and c.g. of Empty FRSA

The weight and center of gravity of the forward record storage assembly in the empty condition shall be as follows:

Weight	25.5 ±1.0 lb.
Longitudinal (x)	Station 28.87 ±0.250 inches
Vertical (z)	2.14 ±0.1 inch
Lateral (y)	-0.26 ±0.1 inch

3.2.1.2.3 Weight and c.g. of Full FRSA

The weight and center of gravity of the FRSA in the full (3000 feet) condition shall be as follows:

Weight: Max.	80 lbs.
Longitudinal (x)	28.44 ±0.3 inches
Vertical (z)	0.70 ±0.250 inch
Lateral (y)	-0.09 ±0.1 inch

3.2.1.2.4 Mass Moments and Products of Inertia

The nominal values of the mass moments and products of inertia of the camera payload about its c.g. and FRSA with full record about its c.g. shall not exceed the values noted below:

	*Camera Payload (Full Supply Cassette, 3000 ft.) (Slug Ft^2)	*Camera Payload (Full Forward Storage Assy., 3000 ft.) (Slug ft^2)	FRSA (Full Record 3000 ft) (Slug ft^2)
Ixx	46.6 ±10%	45.6 ±10%	0.52 ±10%
Iyy	516 ±10%	627 ±10%	0.53 ±10%
Izz	509 ±10%	621 ±10%	0.34 ±10%
Ixy	1.1 ±2.2	1.1 ±2.2	0 ±0.1
Ixz	-23.0 ±3.2	-18.5 ±2.2	0 ±0.1
Iyz	0.38 ±0.2	0.38 ±0.2	0 ±0.1

* includes FRSA

3.2.2 LIGHT LEAKS

With the hatch ejected and the port door closed, the illumination at any point in the Stereo Mirror Bay shall be less than one (1) foot-candle when the exterior of the vehicle is exposed to a light source having a brightness of 10,000 foot-lamberts.

3.3 THERMAL

The thermal interface shall be as described herein and by Table 6.

3.3.1 HEAT SOURCES

The minimum temperature of the C/P shall be maintained in orbit by controlling the temperature of the conduction and radiation interfaces with the aid of thermostatically regulated heating elements. The environmental heating assembly will be provided by GE in the stereo mirror bay, record chute, and recovery capsule and by EK in the lens bay. The heater elements and thermostats supplied by EK will be an integral part of the EK equipment.

3.3.2 CAMERA PORT OPERATION

The Camera view port door will be open only when one of the following conditions exists:

a. During focus adjust
b. When the camera is taking a photograph
c. When the time interval between two photographs is less than (3) minutes.

The view port door will open immediately prior to the initiation of a photographic pass or sequence and will remain open until the completion of the pass except as noted in 3.3.2 (c) above. The time required to open the view port door will not exceed 30 seconds and the action will be complete prior to the actual photographing. The door will be cycled a maximum of (20) times per pass and a maximum of 250 times per complete vehicle mission. The total open time shall not exceed 12 minutes within any one orbital period.

3.4 SMEAR

The smear contributors shall be considered to be as follows:

Attitude control position accuracy (roll, pitch, yaw),
Attitude control rates (roll, pitch, yaw),
GE-EK alignment errors, (about roll, pitch and yaw axes), including that due to thermal distortions.
Film velocity,
Crab position.
Film drive and attitude control vibration (low and high frequency),
Mirror, mounting. Mirror Position.

3.4.1 ALLOCATION

Each contractor shall root sum square all random errors and separately root sum square all bias errors where appropriate except for bias errors having a predictable direction (thermal distortion) and sum to determine the total contractor contribution to smear. The probable distribution of errors as well as correlation of error contribution will be considered. Bias errors are those which provide a constant smear error of the same, although unknown, direction throughout a mission (except thermal distortion which is predictable). The total S/V smear shall be computed by procedures similar to the above including smear due to altitude uncertainty which shall be taken as a random error.

The total allowable smear allocation based on an altitude of 95 nautical miles and an exposure time of 1/400 second, shall be as follows:

Orbit Control Vehicle

Vertical Photograph	30° obliquity 15° stereo
Sx (OCV) = 0.50 ft	Sx (OCV) = 1.07 ft
Sy (OCV) = 0.79 ft	Sy (OCV) = 1.00 ft

Off Axis (yaw vibration contribution)

S_{xv} = 0.56 ft	S_{xv} = 0.67 ft

Camera Payload

Sx (C/P) = 0.66 ft	Sx(C/P) = 0.90 ft
Sy (C/P) = 0.34 ft	Sy(C/P) = 0.44 ft

Knowledge of Altitude

Sx (alt) = 0.34 ft	Sx (alt) = 0.34 ft

S/V Total Smear Allocation

Sx (S/V) = 0.89 ft	Sx (S/V) = 1.48 ft
Sy (S/V) = 0.90 ft	Sy (S/V) = 1.14 ft

It is a design objective that vibration amplitudes caused by active OCV and SRV elements during photography shall be maintained such that the above smear allocations are achieved when including the vibration contribution. The C/P shall meet the requirements stated above except when the film supply and take-up components are operating simultaneously with the camera during unusually long strip type photography in excess of C/P design limits.

3.5 ENVIRONMENT, SATELLITE VEHICLE

Environments, active externally and internally, are as specified in Section 5 and as supplemented by the following paragraphs:

3.5.1 PRECAUTIONS

GE will take reasonable precautions to provide the proper environment for the EK C/P. Some of these precautions are:

a. Provide the S/V with ground cooling air to maintain a slight positive pressure in the S/V and thereby minimize the influx of air other than the controlled ground cooling air, i.e.,

(In the Mab after mating of the C/P to the P/V, during transportation from the MAB to the PAD and on the launch pad up to launch). The ground cooling air will meet the clean requirement and have a relative humidity less than 50%. (See Table 6)

b. Positive action will be taken to eliminate fuel leakage from the orbit control equipment whenever C/P elements are installed in the P/V.

c. Battery outgassing products will be vented through the vehicle if they present an undesirable environmental situation up to and including on-orbit operation.

d. Care will be exercised in the design and location of pyrotechnic devices so that contaminants and shrapnel from the discharge of same will not damage C/P elements.

3.5.2 FILM HANDLING INTERNAL ENVIRONMENT CONTROL

GE shall provide a light-tight, contaminant free, clean environment within the record chute and recovery capsule to protect the film from physical and sensitometric damage during all mission phases.

3.5.2.1 Humidity

The allowable humidity conditions are described in Table 6 and Section 5.

3.5.2.2 Contaminants

The photographic characteristics of the film shall not be degraded due to external or internal contaminants. The materials which can be located adjacent to the film are identified in EK handbook 401-104-1. In the event that desired materials are not included in this handbook, representative samples shall be tested for compliance with allowable photographic characteristics changes.

Changes in the photographic characteristics of Kodak type 3404 film due to external or internal contaminants shall not exceed the following values:

Photographic Speed	0.04
Gamma (Slope of density vs exposure plot). . . .	0.05
Minimum Density	0.03

Each associate contractor shall be responsible for checking all materials near or adjacent to the film provided by them for compatibility with above requirements.

3.5.2.3 Physical Damage

The physical characteristics of the film shall not be degraded by mottling, scratches, digs, or abrasion. Where effects in the above areas are noted, EK shall make final judgment on design adequacy.

3.5.2.4 Light

Accumulated stray light fogging of any portion of the film record from external or internal light sources shall not exceed 0.01 meter-candle-seconds during transport or storage in the assembly.

3.5.2.5 Dirt

The internal parts of the assembly shall not generate dirt to produce a particle count greater than 2000 particles/liter in the region of 1 to 30 μ particle size, with no more than 8 particles/liter of dirt above 30 and less than 100 μ in size.

3.5.3 FILM ENCLOSURE PRESSURE CONTROL

3.5.3.1 A combined system of pressure relief valves shall exist between GE and EK. GE is to provide pressure relief control within the GE recovery capsule and record chute with the following characteristics during ascent and on-orbit:

2.5 psid maximum initial cracking pressure
1.9 psid maximum cracking pressure thereafter
1.25 psid minimum closing pressure

3.5.3.2 EK shall provide pressure relief control within the supply cassette through powered flight and orbital conditions with the following characteristics:

1.9 psid maximum cracking pressure
1.25 psid minimum closing pressure

3.5.3.3 A combined total allowable leak rate within the GE recovery capsule--record chute and EK film handling assembly shall be no greater than 10.3 cc per minute @ one (1) psi differential air at 70° and leaking into an ambient pressure of 10^{-6} mm of Hg. The GE-apportioned allowable leakage is 4.4 cc per minute for the above pressure/temperature condition. The EK-apportioned allowable leakage is 5.9 cc per minute for the above pressure/temperature conditions. The allowable leakage (R) when measured in a pressure of one (1) atmosphere external environment may be obtained by use of the following EK empirical equation:

$$R_{atmos} = 1/3\ R_{vac}$$

3.6 CLEAN ROOM REQUIREMENTS

3.6.1 DUST PARTICLE DISTRIBUTION AND COUNT

The dust particles as a result of air filtering shall have a distribution ranging from 1.0 to 30 microns (3 sigma). Particle count shall not exceed 2000 particles per liter. This specification shall apply to the room closed without occupant or equipment and at the filter outlet when occupied.

TABLE 1 - ELECTRICAL INTERFACE
(Formerly GE Dwg. 75R012; EK Dwg. 501-113)
(Referenced notes follow table)

TEST RECEPTACLE INTERFACE

J695 SP07CE-22-55SX (Note 2)			(P1495) (Note 10) P695 (PT06P-22-55PX (Note 2)	
PIN	FUNCTION	CODE	EQUIV.	PIN
A	Shield (Ground) Tie	----	----	A
B	Auxiliary Record Advance	----	----	B
C	C/P Continuity Loop Input	----	----	C
D	C/P Continuity Loop Output		----	D
E	Environmental Supply	VP50	CPL26	E
F	Platen Position (Fine)	VP51	CPL27	F
G	Slit, Most Significant Bit, NO	VP2	CB20a	G
H	Slit, Most Significant Bit, NC	VP3	CB20b	H
J	Focus Output	VP5	CPL21	J
K	Focus Forward Channel Output	VP1	CPL22	K
L	Slit, Least Significant Bit, NO	VP4	CB21a	L
M	Stereo, Most Significant Bit, NO	VP6	CB8a	M
N	Stereo, Most Significant Bit, NC	VP7	CB8b	N
P	Stereo, Most Significant Bit, Common	VP8	CB8c	P
R	Stereo, Least Significant Bit, NO	VP9	CB9a	R
S	Stereo, Least Significant Bit, NC	VP10	CB9b	S
T	Stereo, Least Significant Bit, Common	VP11	CB9c	T
U	Focus Reverse Channel Output	VP12	CPL23	U
V	+5 Volts D.C. Supply	VP13	----	V
W	Automatic Focus Lead A	VP14	----	W
X	Automatic Focus Lead B	VP15	----	X
Y	Focus Motor Lead A	VP16	----	Y
Z	Focus Motor Lead B	VP17	----	Z
a	Crabbing, Most Significant Bit, NO	VP18	CB10a	a
b	Crabbing, Most Significant Bit, NC	VP19	CB10b	b
c	Crabbing, Most Significant Bit, Common	VP20	CB10c	c
d	Crabbing, 2nd Most Significant Bit, NO	VP21	CB11a	d
e	Crabbing, 2nd Most Significant Bit, NC	VP22	CB11b	e

TABLE 1 - ELECTRICAL INTERFACE (Cont'd)

TEST RECEPTACLE INTERFACE

PIN	FUNCTION	CODE	EQUIV.	PIN
f	Crabbing, 2nd Most Significant Bit, Common	VP23	CB11c	f
g	Crabbing, Least Significant Bit, NO	VP24	CB12a	g
h	Crabbing, Least Significant Bit, NC	VP25	CB12b	h
i	Crabbing, Least Significant Bit, Common	VP26	CB12c	i
j	Film Speed Bit No. 1 ON	VP27	CB1a	j
k	Film Speed Bit No. 1 OFF	VP28	CB1b	k
m	Film Speed Bit No. 2 ON	VP29	CB2a	m
n	Film Speed Bit No. 2 OFF	VP30	CB2b	n
p	Film Speed Bit No. 3 ON	VP31	CB3a	p
q	Film Speed Bit No. 3 OFF	VP32	CB3b	q
r	Film Speed Bit No. 4 ON	VP33	CB4a	r
s	Film Speed Bit No. 4 OFF	VP34	CB4b	s
t	Film Speed Bit No. 5 ON	VP35	CB5a	t
u	Film Speed Bit No. 5 OFF	VP36	CB5b	u
v	Film Speed Bit No. 6 ON	VP37	CB6a	v
w	Film Speed Bit No. 6 OFF	VP38	CB6b	w
x	Camera Drive ON	VP39	CB7a	x
y	Camera Drive OFF	VP40	CB7b	y
z	Common for Command Bits 1 thru 7	VP41	CB17c	z
AA	(Note 11)	VP42	----	AA
BB	(Note 11)	VP43	----	BB
CC	-22 Volts D.C. Supply	VP44	----	CC
DD	+22 Volts D.C. Supply	VP45	----	DD
EE	+28 Volts D.C. Supply	VP46	----	EE
FF	D.C. Return	VP47	----	FF
GG	Slit, Least Significant Bit, NC	VP48	CB21b	GG
HH	Focus Control Power	VP49	CB15a	HH

J696 (P1496) (Note 10)
SP07CE-18-32-SW P696
(Note 2) PT06P-18-32PW (005)(Note 2)

PIN	FUNCTION	CODE	EQUIV.	PIN
A	Shield (Ground) Tie	----	----	A
B	CB 11 Monitor (Note 13) (F-6)	VTP32	CPL32	B
C	CB 8 Monitor (Note 13) (F-6)	VTP30	CPL30	C
D	Instrumentation Return			D
E	Film Take-Up Quantity, Medium	VTP28	CPL28	E

TABLE 1 - ELECTRICAL INTERFACE (Cont'd)

TEST RECEPTACLE INTERFACE

J696 (Cont'd)
SPO7CE-18-32-SW
(Note 2)

(P1496)(Note 10)
P696
PTO6P-18-32PW (005)(Note 2)

PIN	FUNCTION	CODE	EQUIV.	PIN
F	Port Open Tell-Tale	VTP25	CPL25	F
G	CB 10 Monitor (Note 13)(F-6)	VTP24	CPL24	G
H	CB 9 Monitor (Note 13) (F-6)	VTP31	CPL31	H
J	Stereo Servo Control Circuit	VTP33	CPL33	J
K	Crab Servo Control Circuit	VTP34	CPL34	K
L	Platen Position (Coarse)	VTP20	CPL20	L
M	Amplified Data Signals	VTP19	CPL19	M
N	Film Drive Electronics Output	VTP18	CPL18	N
P	28 Volt Supply	VTP35	CPL35	P
R	Crab Position	VTP14	CPL14	R
S	Stereo Position	VTP13	CPL13	S
T	Component Support Tube - Z Sta. 179 Temp	VTP11	CPL11	T
U	Reference Voltage	VTP10	CPL10	U
V	Component Support Tube - Y Sta. 198 Temp	VTP9	CPL9	V
W	Component Support Tube - Y Sta. 179 Temp	VTP8	CPL8	W
X	Component Support Tube - Y Sta. 149 Temp	VTP7	CPL7	X
Y	45° Mirror Temperature	VTP6	CPL6	Y
Z	Lens Barrel Aft End Temp.	VTP5	CPL5	Z
a	Stereo Mirror Temperature	VTP4	CPL4	a
b	Stereo Mirror Differential Temp.	VTP3	CPL3	b
c	CB 12 Monitor (Note 13) (F-6)	VTP1	CPL1	c
d	Forward Record Storage Temp.	VTP2	CPL2	d
e	Take-Up Motor Current	VTP29	CPL29	e
f	Film Take Up Quantity, Coarse Reel Rotation	VTP15	CPL15	f
g	Film Take Up Quantity, Fine	VTP16	CPL16	g
h	Looper Position/Film Tension	VTP17	CPL17	h
j	Slit Position	VTP12	CPL12	j

TABLE 1 - ELECTRICAL INTERFACE (Cont'd)

COMMAND INTERFACE

J697
SP07CE-22-55P
(Note 2)

(P1497)(Note 10)
P697
PT06P-22-55S(005)(Note 2)

PIN	FUNCTION	CODE	PIN
A	Slit, Most Significant Bit, NO	CB20a	A
B	Slit, Most Significant Bit, NC	CB20b	B
C	Slit, Most Significant Bit, Common	CB20c	C
D	Slit, Least Significant Bit, NO	CB21a	D
E	Slit, Least Significant Bit, NC	CB21b	E
F	Slit, Least Significant Bit, Common	CB21c	F
G	(Note 11)	-----	G
H	(Note 11)	-----	H
J	(Note 11)	-----	J
K	No Connection	-----	K
L	No Connection	-----	L
M	CB 9 Monitor (Note 13) (F-6)	CPL 31	M
N	Stereo Servo Control Circuit	CPL 33	N
P	Crab Servo Control Circuit	CPL 34	P
R	28 Volt Supply	CPL 35	R
S	Supply Spool Torque Motor	CB24a	S
T	No Connection	-----	T
U	No Connection	-----	U
V	No Connection	-----	V
W	No Connection	-----	W
X	No Connection	-----	X
Y	No Connection	-----	Y
Z	No Connection	-----	Z
a	No Connection	-----	a
b	No Connection	-----	b
c	No Connection	-----	c
d	No Connection	-----	d
e	No Connection	-----	e
f	No Connection	-----	f
g	No Connection	-----	g
h	Stereo, Most Significant Bit, NO	CB8a	h
i	Stereo, Most Significant Bit, NC	CB8b	i
j	Stereo, Most Significant Bit, Common	CB8c	j
k	Stereo, Least Significant Bit, NO	CB9a	k
m	Stereo, Least Significant Bit, NC	CB9b	m
n	Stereo, Least Significant Bit, Common	CB9c	n
p	Spare	-----	p

TABLE 1 - ELECTRICAL INTERFACE (Cont'd)

COMMAND INTERFACE

J697 (Cont'd) SPO7CE-22-55P (Note 2)		(P1497)(Note 10) P697 PTO6P-22-55S(005)(Note 2)	
PIN	FUNCTION	CODE	PIN
q	Spare	-----	q
r	Spare	-----	r
s	Focus Control Power	CB15a	s
t	No Connection	-----	t
u	Automatic Focus Lead A		u
v	No Connection	-----	v
w	Automatic Focus Lead B		w
x	Focus Motor Lead A		x
y	Focus Motor Lead B		y
z	Crabbing, Most Significant Bit, NO	CB10a	z
AA	Crabbing, Most Significant Bit, NC	CB10b	AA
BB	Crabbing, Most Significant Bit, Common	CB10c	BB
CC	Crabbing, 2nd Most Significant Bit, NO	CB11a	CC
DD	Crabbing, 2nd Most Significant Bit, NC	CB11b	DD
EE	Crabbing, 2nd Most Significant Bit, Common	CB11c	EE
FF	Crabbing, Least Significant Bit, NO	CB12a	FF
GG	Crabbing, Least Significant Bit, NC	CB12b	GG
HH	Crabbing, Least Significant Bit, Common	CB12c	HH

TABLE 1 - ELECTRICAL INTERFACE (Cont'd)

INSTRUMENTATION INTERFACE

J698 SP07CE-20-41S (Note 2)		(P1498)(Note 10) P698 PT06P-20-41P(005)(Note 2)	
PIN	FUNCTION	CODE	PIN
A	Slit Position	CPL12	A
B	Take Up Motor Current	CPL29	B
C	Film Take-Up Quantity, Medium	CPL28	C
D	Film Take-Up Quantity, Fine	CPL16	D
E	Looper Position Umbilical Inst.	BBT1	E
F	Instrumentation Return	-----	F
G	Instrumentation Return	-----	G
H	Environmental Power Supply	CPL26	H
J	Platen Position (Fine)	CPL27	J
K	+5 Volts DC Supply		K
L	Drive Frequency Umbilical Inst.	BBT2	L
M	Port Open Tell-Tale	CPL25	M
N	CB 10 Monitor (Note 13) (F-6)	CPL 24	N
P	Focus Reverse Channel Output	CPL23	P
R	Focus Forward Channel Output	CPL22	R
S	Focus Output	CPL21	S
T	Platen Position (Coarse)	CPL20	T
U	Amplified Data Signals	CPL19	U
V	Film Drive Electronics Output	CPL 18	V
W	Looper Position/Film Tension	CPL17	W
X	Master Umbilical Tell-Tale	BBT6	X
Y	Spare Umbilical Inst.	BBT7	Y
Z	Crab Position	CPL14	Z
a	Stereo Position	CPL13	a
b	CB 11 Monitor (Note 13) (F-6)	CPL32	b
c	Component Support Tube - Z Sta. 179	CPL11	c
d	Reference Voltage Temp.	CPL10	d
e	Component Support Tube - Y Sta. 198 Temp.	CPL9	e
f	Component Support Tube - Y Sta. 179 Temp.	CPL8	f
g	Component Support Tube - Y Sta. 149 Temp.	CPL7	g
h	45° Mirror Temperature	CPL6	h
i	Lens Barrel Aft End Temp.	CPL5	i
j	Stereo Mirror Temperature	CPL4	j

TABLE 1 - ELECTRICAL INTERFACE (Cont'd)

INSTRUMENTATION INTERFACE

J698 (Con'd) SPO7CE-20-41S (Note 2) — (P1498)(Note 10) P698 PTO6P-20-41P(005)(Note 2)

PIN	FUNCTION	CODE	PIN
k	Stereo Mirror Differential Temp.	CPL3	k
m	+22 Volts DC Supply (Note 7)	-----	m
n	CB 12 Monitor (Note 13) (F-6)	CPL 1	n
p	CB 8 Monitor (Note 13) (F-6)	CPL30	p
q	Stereo Mirror Umbilical Temperature	BBT3	q
r	Tube Sta. 177 Umbilical Temperature	BBT4	r
s	Torque Motor Command Umbilical Inst.	BBT5	s
t	Umbilical Return	-----	t

J673 SPO7CE 14-18-SW (Note 2) — (F-4) (Special Stereo Mirror Instrumentation) — (P1473)(Note 10) P673 SPO6CE 14-18-PW-SR (Note 2)

PIN	FUNCTION	CODE	PIN
A	See Sketch A Table II	CPL36	A
B	See Sketch A Table II	CPL37	B
C	See Sketch A Table II	CPL38	C
D	See Sketch A Table II	CPL39	D
E	See Sketch A Table II	CPL40	E
F	See Sketch A Table II	CPL41	F
G	See Sketch A Table II	CPL42	G
H	See Sketch A Table II	CPL43	H
J	See Sketch A Table II	CPL44	J
K - T	No Connection (Note 5)		K - T

TABLE 1 - ELECTRICAL INTERFACE (Cont'd)

POWER AND COMMAND INTERFACE

J699 SP07CE-20-41PW (Note 2) — (P1499)(Note 10) P699 PT06P-20-41SW(005)(Note 2)

PIN	FUNCTION	CODE	PIN
A	No Connection	-----	A
B	22 Volts DC return	-----	B
C	No Connection	-----	C
D	Spare	-----	D
E	Spare	-----	E
F	No Connection	-----	F
G	No Connection	-----	G
H	Film Speed Bit, No. 1 ON	CB1a	H
J	Film Speed Bit, No. 1 OFF	CB1b	J
K	Film Speed Bit, No. 2 ON	CB2a	K
L	Film Speed Bit, No. 2 OFF	CB2b	L
M	Film Speed Bit, No. 3 ON	CB3a	M
N	Film Speed Bit, No. 3 OFF	CB3b	N
P	Film Speed Bit, No. 4 ON	CB4a	P
R	Film Speed Bit, No. 4 OFF	CB4b	R
S	Film Speed Bit, No. 5 ON	CB5a	S
T	Film Speed Bit, No. 5 OFF	CB5b	T
U	Film Speed Bit, No. 6 ON	CB6a	U
V	Film Speed Bit, No. 6 OFF	CB6b	V
W	Camera Drive ON	CB7a	W
X	Camera Drive OFF	CB7b	X
Y	Common for Command Bits, 1 thru 7	CB1-7c	Y
Z	Common for Command Bits, 1 thru 7	CB1-7c	Z
a	Data Signal "A"		a
b	Data Signal "A" Return		b
c	Data Signal "B"		c
d	Data Signal "B" Return		d
e	No Connection		e
f	+28 Volts DC Supply		f
g	+28 Volts DC Supply		g
h	+28 Volts DC Environmental Supply		h
i	+28 Volts DC Environmental Supply		i
j	DC Return		j
k	DC Return		k
m	No Connection		m
n	DC Return		n

TABLE 1 - ELECTRICAL INTERFACE (Cont'd)

J699 (Cont'd)
SP)7CE-20-41PW
(Note 2)

POWER & COMMAND INTERFACE

(P1499)(Note 10)
P699
PTO6P-20-41SW(005)

PIN		FUNCTION	CODE	PIN
p	(Note 11)			p
q	(Note 11)			q
r	Spare		-----	r
s	Spare		-----	s
t	No Connection		-----	t

TABLE 1 - ELECTRICAL INTERFACE (Cont'd)

ELECTRICAL DISTRIBUTION ASSEMBLY INTERFACE

J654
SPO7CE-18-32P(SR)
(Note 2)

(P1454)(Note 10)
P654
PTO6P-18-32S(005)

PIN	FUNCTION	CODE	PIN	NOTE 3
A	No Connection	----	A	------
B	(Note 11)	----	B	
C	Forward Record Storage Temp. (Note 8)	CPL2	C	h on J661
D	Instrumentation Return		D	T on J661
E	(Note 11)	----	E	
F	Film Take-Up Quantity, Coarse Reel Rotation (See Note 8)	CPL15	F	W ON J661
G	(Note 11)		G	
H	Take-Up Motor Drive Feed		H	Z ON J661
J	Take-Up Motor Drive Return		J	a ON J661
K	Take-UP Motor Drive Feed		K	b ON J661
L	Take-Up Motor Drive Return		L	c ON J661
M	No Connection		M	
N	No Connection		N	
P	(Note 11)		P	
R	No Connection		R	
S	No Connection		S	
T	No Connection		T	
U	No Connection		U	
V	No Connection		V	
W	No Connection		W	
X	+22 Volts DC Supply		X	g ON J661
Y	No Connection		Y	
Z	(Note 11)		Z	
a	(Note 11)	----	a	
b	(Note 11)	----	b	
c	(Note 11)	----	c	
d	No Connection		d	
e	No Connection		e	
f	(Note 11)		f	
g	Continuity Loop		g	h ON J654
h	Continuity Loop		h	g ON J654
j	(Note 11)		j	

TABLE 1 - ELECTRICAL INTERFACE (Cont'd)

FORWARD RECORD STORAGE INTERFACE

J661
PT07H-18-32PW
(Note 2)

(P1461)
P661
PT06P-18-32SW(005)(Note 2)

PIN	FUNCTION	CODE	PIN	NOTE 3
A	No Connection		A	
B	No Connection		B	
C	No Connection		C	
D	No Connection		D	
E	No Connection		E	
F	No Connection		F	
G	No Connection		G	
H	No Connection		H	
J	Continuity Loop (See Note 12)		J	
K	Continuity Loop (See Note 12)		K	
L	No Connection		L	
M	No Connection		M	
N	No Connection		N	
P	No Connection		P	
R	No Connection		R	
S	No Connection		S	
T	Instrumentation Return		T	D ON J654
U	No Connection		U	
V	No Connection		V	
W	Film Take-Up Quantity, Coarse Reel Rotation (See Note 8)	CPL15	W	F ON J654
X	+5 Volts DC Supply		X	
Y	No Connection		Y	
Z	Take-Up Motor Drive Feed		Z	H ON J654
a	Take-Up Motor Drive Return		a	J ON J654
b	Take-Up Motor Drive Feed		b	K ON J654
c	Take-Up Motor Drive Return		c	L ON J654
d	No Connection		d	
e	No Connection		e	
f	No Connection		f	
g	+22 Volts DC Supply		g	X ON J654
h	Forward Record Storage Temp(Note 8)	CPL2	h	C ON J654
i	No Connection		i	

TABLE 1 - ELECTRICAL INTERFACE (Cont'd)

NOTES:

1. J654, J661, J696, J697, J698, J699 & J695 shall be Bendix Pygmy Connectors.

2. Manufacturers part number on connectors shall be for reference only.

3. The interconnections indicated by the entries in these columns shall be made by the General Electric Co. outside the Camera Payload. Except for the functions referenced to Note 8, the wiring shall consist of point-to-point interconnections only.

4. The descriptive functional designations associated with command wires, instrumentation points, test points, and umbilical points shall be for reference only and shall not constitute a part of the interface agreement.

5. A pin labeled "No Connection" shall not have a wire attached to it within the Camera Payload. A pin labeled "Spare" shall have a wire attached to it within the Camera Payload. These spare wires shall be reserved for future use if needed.

6. Eastman Kodak Number assignments for plugs, jacks, etc., are 650 to 699 incl.

7. This voltage, supplied by the Camera Payload shall be used for instrumentation calibration.

8. In addition to the interconnections specified by Note 3, the interconnecting wiring shall be used for sampling of these 2 instrumentation points.

9. Deleted

10. This designation is for use by GE to establish conformity with the connector numbering system used in the S/V.

11. General Electric Co. shall not make connections to these pins.

12. This continuity loop will be incorporated into the SRV continuity loop.

(F-6) 13. The connections on the EK side of the interface will remain as indicated. There will be no connection on the GE side of the interface.

TABLE 2 - INSTRUMENTATION INFORMATION
(Formerly GE Dwg. 74E005; EK Dwg. 501-114)

CODE	FUNCTION (Note 3)	RANGE (Note 3)	REAL TIME DATA MIN. SAMPLING RATE SPS*	RECORDED DATA MIN. SAMPLING RATE SPS*	MEASUREMENT PRIORITY (NOTE 6)	CIRCUIT OUTPUT IMPEDANCE IN OHMS MIN.	MAX.	REFERENCE	THEVENIN LOAD CHARACTERISTICS IMPEDANCE	VOLTAGE
(F-6)CPL 1	CB 12 Monitor (Note 15)	NA	0	0	B	0	5000	+28	123K (9)	+2.5 (11)
CPL 2	Forward Record Storage Temp.	35° to 120°F	1/18	1/18	B	4200	5600	+22VDC	148K (10)	+2.5 (12)
CPL 3	Stereo Mirror Differential Temp.	-1°F to +3°F	1/18	1	A	0	5000	+22VDC	148K (10)	+2.5 (12)
(F-5)CPL 4	Stereo Mirror Temp.	60°F to 80°F	1/18	1/18	C	0	5000	±22VDC	123K (9)	+2.5 (11)
(F-5)CPL 5	Lens Barrel Aft End Temp.	60°F to 80°F	1/18	1/18	C	0	5000	±22VDC	123K (9)	+2.5 (11)
(F-5)CPL 6	45° Mirror Temp.	60°F to 80°F	1/18	1/18	C	0	5000	±22VDC	123K (9)	+2.5 (11)
(F-5)CPL 7	Component Support Tube-Y Sta 149 Temp.	60°F to 80°F	1/18	1/18	C	0	5000	±22VDC	123K (9)	+2.5 (11)
(F-5)CPL 8	Component Support Tube-Y Sta 179 Temp.	60°F to 80°F	1/18	1/18	C	0	5000	±22VDC	123K (9)	+2.5 (11)
(F-5)CPL 9	Component Support Tube-Y Sta 198 Temp.	60°F to 80°F	1/18	1/18	C	0	5000	±22VDC	123K (9)	+2.5 (11)

( ) Refers to applicable note(s) following this table
* SPS = Samples per Second

TABLE 2 - INSTRUMENTATION INFORMATION
(Formerly GE Dwg. 74E005; EK Dwg. 501-114)
(Continued)

CODE	FUNCTION (Note 3)	RANGE (Note 3)	REAL TIME DATA MIN. SAMPLING RATE SPS*	RECORDED DATA MIN. SAMPLING RATE SPS*	MEASUREMENT PRIORITY (NOTE 6)	CIRCUIT OUTPUT IMPEDANCE IN OHMS MIN.	MAX.	REFERENCE	THEVENIN LOAD IMPEDANCE		THEVENIN CHARACTERISTICS VOLTAGE	
(F-5)CPL 10	Reference Voltage	NA	1/18	1/18	C	0	5000	+22VDC	123K	9	+2.5	11
(F-6)CPL11	Component Support Tube-Z Sta 179 Temp.	35°F to 120°F	1/18	0	B	4200	5600	+22VDC	148K	10	+2.5	12
CPL 12	Slit Position	1 to 4	1	1	B	0	5000	+5VDC	148K	10	+2.5	12
CPL 13	Stereo Position	-15° to +15°	1	1	B	0	5000	+5VDC	148K	10	+2.5	12
CPL 14	Crab Position	0° to 3.5°	1	1	B	0	5000	+5VDC	148K	10	+2.5	12
CPL 15	Film Take-Up Quantity, Coarse Reel Rotation	0 to 1017 ft	2.5	2.5	B	0	5000	+5VDC	148K	10	+2.5	12
CPL 16	Film Take-Up Quantity, Fine	0 to 45 ft	1	1	B	0	5000	+22VDC	148K	10	+2.5	12
CPL 17	Looper Position/ Film Tension	2 in to 27 in	5	5	B	0	5000	+5VDC	148K	10	+2.5	12
CPL 18	Film Drive Electronics Output	3 State	1	1	B	0	5000	+5VDC or +22VDC	148K	10	+2.5	12
(F-10)CPL 19	Take Up Motor/Torque Brake Current	0 to 1.3 amps DC	5	5	B	0	5000	+5VDC or +22VDC	148K	10	+2.5	12
CPL 20	Platen Position (Coarse)	0 to ±0.010 inches	1	1	A	0	5000	+5VDC	148K	10	+2.5	12
CPL 21	Focus Output	NA	2.5	2.5	A	0	1000	+22VDC	113K	14	-.38	13

TABLE 2 - INSTRUMENTATION INFORMATION
(Formerly GE Dwg. 74E005; EK Dwg. 501-114)
(Continued)

	CODE	FUNCTION (Note 3)	RANGE (Note 3)	REAL TIME DATA MIN. SAMPLING RATE SPS	RECORDED DATA MIN SAMPLING RATE SPS	MEASUREMENT PRIORITY (Note 6)	CIRCUIT OUTPUT IMPEDANCE IN OHMS MIN	MAX	REFERENCE	THEVENIN LOAD CHARACTERISTICS IMPEDANCE		VOLTAGE	
	CPL 22	Focus Forward Channel Output	NA	2.5	2.5	A	0	1000	+22VDC	148K	10	+2.5	12
	CPL 23	Focus Reverse Channel Output	NA	2.5	2.5	A	0	1000	+22VDC	148K	10	+2.5	12
(F-6)	CPL 24	CB 10 Monitor (Note 15)	NA	0	0	B	0	5000	+28VDC	123K	9	+2.5	11
	CPL 25	Port Open Tell Tale	5 State	1/18	1/18	B	0	5000	+22VDC	148K	10	+2.5	12
	CPL 26	Environmental Power Supply-OCV	2 State	1/18	1/18	B	0	5000	+5VDC or +22VDC	148K	10	+2.5	12
	CPL 27	Platen Position (Fine)	NA	1	1	A	0	5000	+5VDC	148K	10	+2.5	12
		Instrumentation Calib. Voltage	+22 ±0.1VDC	1/18	1/18	C			+22VDC	148K	10	+2.5	12
	CPL 28	Film Take-Up Quantity, Medium	0 to 281 ft	2.5	0	B	0	5000	+22VDC	148K	10	+2.5	12
(F-10)	CPL 29	Amplified Data Signal	4 State	2.5	2.5	B	0	5000	+22VDC	148K	10	+2.5	12
(F-6)	CPL 30	CB 8 Monitor (Note 15)	NA	0	0	B	0	5000	+28VDC	148K	10	+2.5	12
(F-6)	CPL 31	CB 9 Monitor (Note 15)	NA	0	0	B	0	5000	+28VDC	148K	10	+2.5	12
(F-6)	CPL 32	CB 11 Monitor (Note 15)	NA	0	0	B	0	5000	+28VDC	123K	9	+2.5	11

Approved for Release: 2024/01/30 C05099027

TABLE 2 - INSTRUMENTATION INFORMATION
(Formerly GE Dwg. 74E005; EK Dwg. 501-114)
(Continued)

CODE	FUNCTION (Note 3)	RANGE (Note 3)	REAL TIME DATA MIN. SAMPLING RATE SPS	RECORDED DATA MIN SAMPLING RATE SPS	MEASUREMENT PRIORITY (Note 6)	CIRCUIT OUTPUT IMPEDANCE IN OHMS MIN	MAX	REFERENCE	THEVENIN LOAD CHARACTERISTICS IMPEDANCE	VOLTAGE
CPL 33	Stereo Servo Control Circuit	NA	2.5	2.5	B	0	5000	+28VDC	148K (10)	+2.5 (12)
CPL 34	Crab Servo Control Circuit	NA	2.5	2.5	B	0	5000	+28VDC	148K (10)	+2.5 (12)
CPL 35	28 Volt Supply	NA	2.5	2.5	B	0	5000	+28VDC	148K (10)	+2.5 (12)
CPL 36	See Sketch A	-1°F to 3°F	1/18	1/18	D	0	5000	±22VDC	123K (9)	+2.5 (11)
CPL 37		-¼°F to 3/4°F	1/18	1/18	D	0	5000	±22VDC	123K (9)	+2.5 (11)
CPL 38		-1/4°F to 3/4°F	1/18	1/18	D	0	5000	±22VDC	123K (9)	+2.5 (11)
CPL 39	(F-4)	-1°F to 3°F	1/18	1/18	D	0	5000	±22VDC	123K (9)	+2.5 (11)
CPL 40		-1/4°F to 3/4°F	1/18	1/18	D	0	5000	±22VDC	123K (9)	+2.5 (11)
CPL 41		-1°F to3°F	1/18	1/18	D	0	5000	±22VDC	123K (9)	+2.5 (11)
CPL 42		60°F to 80°F	1/18	1/18	D	0	5000	±22VDC	123K (9)	+2.5 (11)
CPL 43		60°F to 80°F	1/18	1/18	D	0	5000	±22VDC	123K (9)	+2.5 (11)
CPL 44	See Sketch A	60°F to 80°F	1/18	1/18	D	0	5000	±22VDC	123K (9)	+2.5 (11)

Approved for Release: 2024/01/30 C05099027

NOTES:

1. Deleted

2. Deleted

3. The information contained in these columns is for reference only and does not constitute a part of the interface agreement.

4. Deleted

5. Deleted

6. Measurement priorities shall be defined as follows:

   A - Real time telemetry data required while commanding the vehicle. Telemetry in this category will receive real time processing.

   B - Telemetry data indicating possible off-nominal performance for which corrective commands may be generated. This data will be processed in near real time. Real time processing is acceptable.

   C - Telemetry data required to provide the basis for any required redesign, in the event of off-nominal operations. Telemetry in this category will receive post flight data reduction.

   D - Telemetry data required to:
   (1) Establish verification of achieving mission objectives.

   (2) Provide basis for state-of-the-art advances.

   Telemetry in this category will receive post-flight data reduction. Any priority includes all lower priorities and data reduction requirements.

7. Deleted

8. In order to obtain the maximum redundancy the following restrictions must be applied to the following instrumentation points.

   A. CPL 15, CPL 16 and CPL 28 must each be assigned to a different multiplexer.

   B. CPL 25 must not be assigned to the same multiplexer as the GE environmental power instrumentation.

   C. CPL 15 and CPL 17 must not be assigned to the same multiplexer.

Notes - (Cont'd)

9. Impedance may vary from 120.8K to 127.8K

10. Impedance may vary from 146K to 152K

11. Voltage may vary from 1.0 volt to 5.0 volts.

12. Voltage may vary from 0.65 volt to 5.50 volts

13. Voltage may vary from -1.84 volts to 2.23 volts

14. Impedance may vary from 111K to 117K.

15. Although these functions still exist in the CPL, they are not
(F-6) wired on the GE side of the interface.

SPECIAL STEREO MIRROR INSTRUMENTATION

(F-4)

3737-72-3

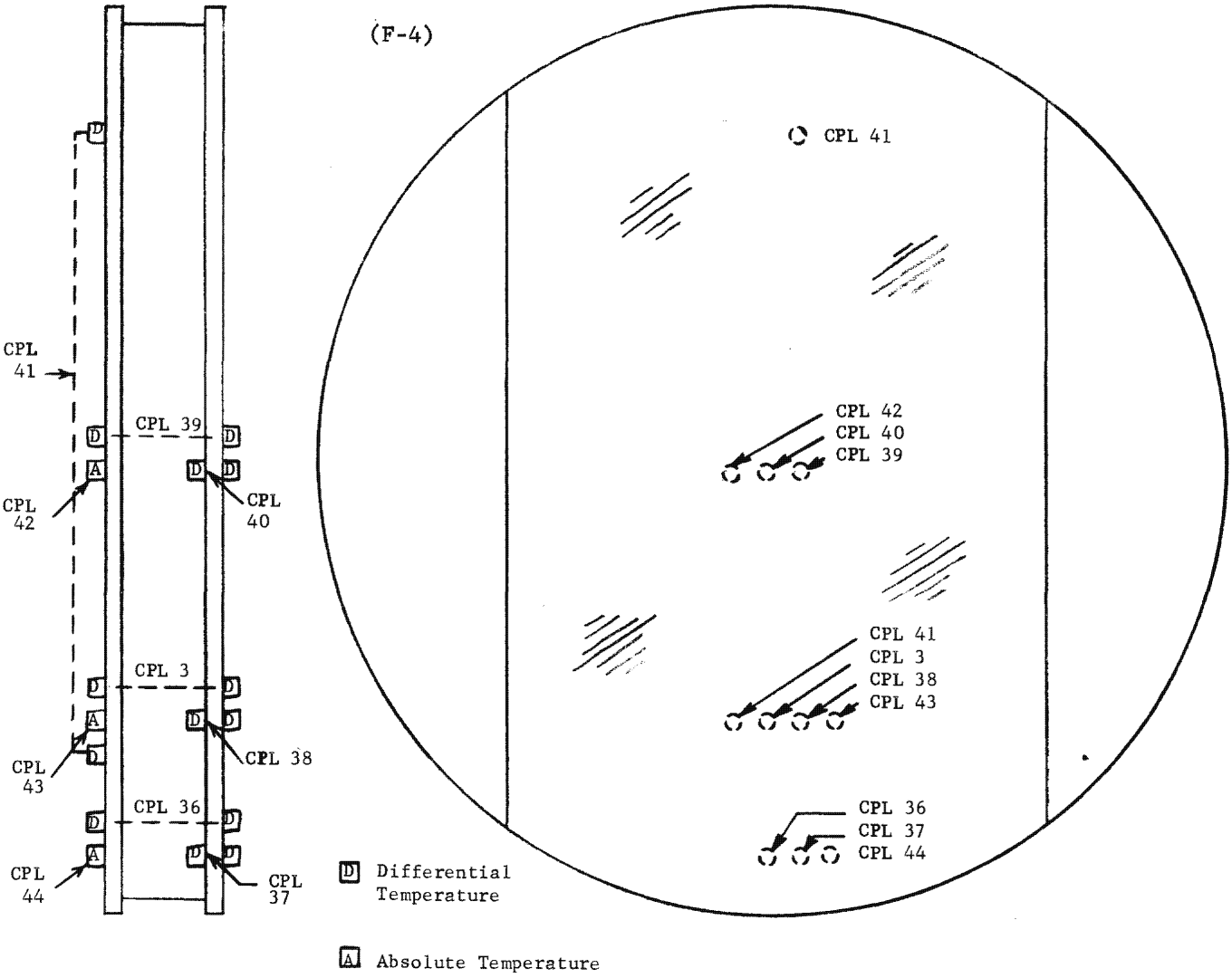

SKETCH A

TABLE 3 - TEST POINT INFORMATION, CP
(Formerly GE Dwg. 75R013; EK Dwg. 801-112)
(Referenced Notes follow table)

TEST CODE	FLIGHT CODE	FUNCTION	OUTPUT VOLTAGE IN VOLTS MIN	OUTPUT VOLTAGE IN VOLTS MAX	REQUIRED FREQUENCY RESPONSE IN CPS	REQUIRED ACCURACY IN % NOTE 7	REFERENCE TABLE	OUTPUT IMPEDANCE IN KILOHMS MIN	OUTPUT IMPEDANCE IN KILOHMS MAX	REMARKS
6) VTP 1	CPL 1	CB 12 Monitor	0	5.0	1/100	2.0	5	0	5.0	Note 10
VTP 2	CPL 2	Take-Up Cassette Film Path Temp.	0	5.0	1/100	2.0	2	4.2	5.6	
VTP 3	CPL 3	Stereo Mirror Differential Temp.	0	5.0	1/100	2.0	2	0	5.0	
VTP 4	CPL 4	Stereo Mirror Temp.	0	5.0	1/100	2.0	2	0	5.0	(F-5)
VTP 5	CPL 5	Lens Barrel Aft End Temperature	0	5.0	1/100	2.0	2	0	5.0	
VTP 6	CPL 6	45° Mirror Temp.	0	5.0	1/100	2.0	2	0	5.0	(F-5)
VTP 7	CPL 7	Component Support Tube-Y STA 149 Temp.	0	5.0	1/100	2.0	2	0	5.0	(F-5)
VTP 8	CPL 8	Component Support Tube-Y STA 179 Temp.	0	5.0	1/100	2.0	2	0	5.0	(F-5)
VTP 9	CPL 9	Component Support Tube-Y STA 198 Temp.	0	5.0	1/100	2.0	2	0	5.0	(F-5)
VTP 10	CPL 10	Reference Voltage	1.0	3.0	1/100	2.0	2	0	5.0	(F-5)
VTP 11	CPL 11	Component Support Tube-Z STA 179 Temp.	0	5.0	1/100	2.0	2	4.2	5.6	

TABLE 3 - TEST POINT INFORMATION, CP (CONTINUED)

TEST CODE	FLIGHT CODE	FUNCTION	OUTPUT VOLTAGE IN VOLTS MIN	OUTPUT VOLTAGE IN VOLTS MAX	REQUIRED FREQUENCY RESPONSE IN CPS	REQUIRED ACCURACY IN % NOTE 7	REFERENCE TABLE	OUTPUT IMPEDANCE IN KILOHMS MIN	OUTPUT IMPEDANCE IN KILOHMS MAX	REMARKS
VTP 12	CPL 12	Slit Position	0	5.0	1	2.0	2	0	5.0	
VTP 13	CPL 13	Stereo Position	0	5.0	1	2.0	2	0	5.0	
VTP 14	CPL 14	Crab Position	0	5.0	1	2.0	2	0	5.0	
VTP 15	CPL 15	Film Take-Up Quantity Coarse Reel Rotation	0	5.0	1/2	2.0	2	0	5.0	
VTP 16	CPL 16	Film Take-Up Quantity Fine	0	5.0	1	2.0	2	0	5.0	
VTP 17	CPL 17	Looper Position/ Film Tension	0	5.0	1	2.0	2	0	5.0	
VTP 18	CPL 18	Film Drive Electronics Output	0	5.0	1/2	2.0	2	0	5.0	
F-10) VTP 19	CPL 19	Take Up Motor Torque Brake Current	0	5.0	1	2.0	2	0	5.0	
VTP 20	CPL 20	Platen Position (Coarse)	0	5.0	1	2.0	2	0	5.0	
-6) VTP 24	CPL 24	CB 10 Monitor	0	5.0	1/100	2.0	5	0	5.0	Note 10
VTP 25	CPL 25	Port-Open Telltale	0	5.0	1	2.0	2	0	5.0	
VTP 28	CPL 28	Film Take-Up Quantity, Medium	0	5.0	1/2	2.0	2	0	5.0	

TABLE 3 - TEST POINT INFORMATION, CP (Continued)

TEST CODE	FLIGHT CODE	FUNCTION	OUTPUT VOLTAGE IN VOLTS MIN	OUTPUT VOLTAGE IN VOLTS MAX	REQUIRED FREQUENCY RESPONSE IN CPS	REQUIRED ACCURACY IN % NOTE 7	REFERENCE TABLE	OUTPUT IMPEDANCE IN KILOHMS MIN	OUTPUT IMPEDANCE IN KILOHMS MAX	REMARKS
(F-10)VTP 29	CPL 29	Amplified Data Signal	0	5.0	1/2	2.0	2	0	5.0	
(F-6)VTP 30	CPL 30	CB 8 Monitor	0	5.0	1/5	2.0	5	0	5.0	Note 10
(F-6)VTP 31	CPL 31	CB 9 Monitor	0	5.0	1/5	2.0	5	0	5.0	Note 10
(F-6)VTP 32	CPL 32	CB 11 Monitor	0	5.0	1/100	2.0	5	0	5.0	Note 10
VTP 33	CPL 33	Stereo Servo Control Circuit	0	5.0	1/2	2.0	5	0	5.0	
VTP 34	CPL 34	Crab Servo Control Circuit	0	5.0	1/2	2.0	5	0	5.0	
VTP 35	CPL 35	28 Volt Supply	0	5.0	1/2	2.0	5	0	5.0	
VP 1	CPL 22	Focus, Forward Channel Output	0	5.0	1/2	2.0	2	0	1.0	
VP 2	CB 20a	Slit, Most Significant Bit N.O.	3.2	4.0	Note 3	Note 3	5	0	0.5	Notes 8,9
VP 3	CB 20b	Slit, Most Significant Bit N.C.	3.2	4.0	Note 3	Note 3	5	0	0.5	Notes 8,9
VP 4	CB 21a	Slit, Least Significant Bit N.O.	3.2	4.0	Note 3	Note 3	5	0	0.5	Notes 8,9
VP 5	CPL 21	Focus Output	0	5.0	1	2.0	2	0	1.0	
VP 6	CB 8a	Stereo, Most Significant Bit N.O.	0	32.5	Note 3	Note 3	5	Note 4	Note 4	

Approved for Release: 2024/01/30 C05099027

TABLE 3 - TEST POINT INFORMATION, CP (Continued)

TEST CODE	FLIGHT CODE	FUNCTION	OUTPUT VOLTAGE IN VOLTS MIN	OUTPUT VOLTAGE IN VOLTS MAX	REQUIRED FREQUENCY RESPONSE IN CPS	REQUIRED ACCURACY IN % NOTE 7	REFERENCE TABLE	OUTPUT IMPEDANCE IN KILOHMS MIN	OUTPUT IMPEDANCE IN KILOHMS MAX	REMARKS
VP 7	CB 8b	Stereo, Most Significant Bit N.C.	0	32.5	Note 3	Note 3	5	Note 4	Note 4	
VP 8	CB 8c	Stereo, Most Significant Bit Common	0	32.5	Note 3	Note 3	5	Note 4	Note 4	
VP 9	CB 9a	Stereo, Least Significant Bit N.O.	0	32.5	Note 3	Note 3	5	Note 4	Note 4	
VP 10	CB 9b	Stereo, Least Significant Bit N.C.	0	32.5	Note 3	Note 3	5	Note 4	Note 4	
VP 11	CB 9c	Stereo, Least Significant Bit Common	0	32.5	Note 3	Note 3	5	Note 4	Note 4	
VP 12	CPL 23	Focus Reverse Channel Output	0	5.0	1/2	2.0	2	0	1.0	
VP 13		+5 Volts DC Supply	0	5.1	1	2.0		Note 4	Note 4	
VP 14		Automatic Focus Lead A	0	32.5	1	10.0	5	Note 6	Note 6	Note 3
VP 15		Automatic Focus Lead B	0	32.5	1	10.0	5	Note 6	Note 6	Note 3
VP 16		Focus Motor Lead A	0	32.5	1	10.0	5	Note 4 & 6	Note 4 & 6	Note 3
VP 17		Focus Motor Lead B	0	32.5	1	10.0	5	Note 4 & 6	Note 4 & 6	Note 3

TABLE 3 - TEST POINT INFORMATION,CP (Continued)

TEST CODE	FLIGHT CODE	FUNCTION	OUTPUT VOLTAGE IN VOLTS MIN	MAX	REQUIRED FREQUENCY RESPONSE IN CPS	REQUIRED ACCURACY IN % NOTE 7	REFERENCE TABLE	OUTPUT IMPEDANCE IN KILOHMS MIN	MAX	REMARKS
VP 18	CB 10a	Crabbing, most Significant Bit N.O.	0	32.5	Note 3	Note 3	5	Note 4	Note 4	
VP 19	CB 10b	Crabbing, Most Significant Bit N.C.	0	32.5	Note 3	Note 3	5	Note 4	Note 4	
VP 20	CB 10c	Crabbing, Most Significant Bit Common	0	32.5	Note 3	Note 3	5	Note 4	Note 4	
VP 21	CB 11a	Crabbing, 2nd Most Significant Bit N.O.	0	32.5	Note 3	Note 3	5	Note 4	Note 4	
VP 22	CB 11b	Crabbing, 2nd Most Significant Bit N.C.	0	32.5	Note 3	Note 3	5	Note 4	Note 4	
VP 23	CB 11c	Crabbing, 2nd Most Significant Bit Common	0	32.5	Note 3	Note 3	5	Note 4	Note 4	
VP 24	CB 12a	Crabbing, Least Significant Bit N.O.	0	32.5	Note 3	Note 3	5	Note 4	Note 4	
VP 25	CB 12b	Crabbing, Least Significant Bit N.C.	0	32.5	Note 3	Note 3	5	Note 4	Note 4	
VP 26	CB 12c	Crabbing, Least Significant Bit Common	0	32.5	Note 3	Note 3	5	Note 4	Note 4	
VP 27	CB 1a	Film Speed Bit No.1 ON	0	32.5	Note 3	Note 3	5	Note 4	Note 4	
VP 28	CB1b	Film Speed Bit No. 1 OFF	0	32.5	Note 3	Note 3	5	Note 4	Note 4	

Approved for Release: 2024/01/30 C05099027

TABLE 3 TEST POINT INFORMATION, CP (Continued)'

TEST CODE	FLIGHT CODE	FUNCTION	OUTPUT VOLTAGE IN VOLTS MIN	REQUIRED FREQUENCY MAX	RESPONSE IN CPS	REQUIRED ACCURACY IN % NOTE 7	REFERENCE TABLE	OUTPUT IMPEDANCE IN KILOHMS MIN	MAX	REMARKS
VP 29	CB 2a	Film Speed Bit No. 2 ON	0	32.5	Note 3	Note 3	5	Note 4	Note 4	
VP 30	CB 2b	Film Speed Bit No. 2 Off	0	32.5	Note 3	Note 3	5	Note 4	Note 4	
VP 31	CB 3a	Film Speed Bit No. 3 ON	0	32.5	Note 3	Note 3	5	Note 4	Note 4	
VP 32	CB 3b	Film Speed Bit No. 3 OFF	0	32.5	Note 3	Note 3	5	Note 4	Note 4	
VP 33	CB 4a	Film Speed Bit No. 4 ON	0	32.5	Note 3	Note 3	5	Note 4	Note 4	
VP 34	CB 4b	Film Speed Bit No. 4 OFF	0	32.5	Note 3	Note 3	5	Note 4	Note 4	
VP 35	CB 5a	Film Speed Bit No. 5 ON	0	32.5	Note 3	Note 3	5	Note 4	Note 4	
VP 36	CB 5b	Film Speed Bit No. 5 OFF	0	32.5	Note 3	Note 3	5	Note 4	Note 4	
VP 37	CB 6a	Film Speed Bit No. 6 ON	0	32.5	Note 3	Note 3	5	Note 4	Note 4	
VP 38	CB 6b	Film Speed Bit No. 6 OFF	0	32.5	Note 3	Note 3	5	Note 4	Note 4	
VP 39	CB 7a	Camera Drive ON	0	32.5	Note 3	Note 3	5	Note 4	Note 4	
VP 40	CB 7b	Camera Drive OFF	0	32.5	Note 3	Note 3	5	Note 4	Note 4	

TABLE 3 - TEST POINT INFORMATION, CP (Continued)

TEST CODE	FLIGHT CODE	FUNCTION	OUTPUT VOLTAGE IN VOLTS MIN	OUTPUT VOLTAGE IN VOLTS MAX	REQUIRED FREQUENCY RESPONSE IN CPS	REQUIRED ACCURACY IN % NOTE 7	REFERENCE TABLE	OUTPUT IMPEDANCE IN KILOHMS MIN	OUTPUT IMPEDANCE IN KILOHMS MAX	REMARKS
VP 41	CB1-7c	Common for Command Bits 1 thru 7					5			
VP 42		For EK Use Only								
VP 43		For EK Use Only								
VP 44		-22 Volts DC Supply	0	-22.1	1	2.0	-	0	0.001	Note 5
VP 45		+22 Volts DC Supply	0	22.1	1	2.0	-	0	0.001	Note 5
VP 46		+28 Volts DC Supply	0	32.5	1	2.0	-	Note 4	Note 4	
VP 47		DC Return	-	-	-	-	-	-	-	
VP 48	CB2 1b	Slit, Lease Significant Bit N.C.	3.2	4.0	Note 3	Note 3	5	0	0.5	Notes 8 & 9
VP 49	CB 15a	Focus Control Power Command	0	32.5	1	Note 3	5	Note 4	Note 4	
VP 50	CPL 26	Environmental Supply	0	5.0	1/100	2.0	2	0	5.0	
VP 51	CPL 27	Platen Position (Fine)	0	5.0	1	2.0	2	0	5.0	
(F-4)	CPL 36	Stereo Mirror Front to Back Differential Temperature 2" from Edge	0	5.0	1/100	2.0	2	0	5.0	

Approved for Release: 2024/01/30 C05099027

TABLE 3 - TEST POINT INFORMATION, CP (Continued)

	FLIGHT CODE	FUNCTION	OUTPUT VOLTAGE IN VOLTS MIN	MAX	REQUIRED FREQUENCY RESPONSE IN CPS	REQUIRED ACCURACY IN % NOTE 7	REFERENCE TABLE	OUTPUT IMPEDANCE IN KILOHMS MIN	MAX	REMARKS
(F-4)	CPL 37	Stereo Mirror Front Plate Differential Temp. 2" from edge	0	5.0	1/100	2.0	2	0	5.0	
(F-4)	CPL 38	Stereo Mirror Front Plate Differential Temp. 5" from Edge	0	5.0	1/100	2.0	2	0	5.0	
(F-4)	CPL 39	Stereo Mirror Front to Back Differential Temp. Center	0	5.0	1/100	2.0	2	0	5.0	
(F-4)	CPL 40	Stereo Mirror Front Plate Differential Temp. Center	0	5.0	1/100	2.0	2	0	5.0	
(F-4)	CPL 41	Stereo Mirror Top to Bottom Differential Temp.	0	5.0	1/100	2.0	2	0	5.0	
(F-4)	CPL 42	Stereo Mirror Back Plate Absolute Temp. Center	0	5.0	1/100	2.0	2	0	5.0	
(F-4)	CPL 43	Stereo Mirror Back Plate Absolute Temp. 5" from Edge	0	5.0	1/100	2.0	2	0	5.0	
(F-4)	CPL 44	Stereo Mirror Back Plate Absolute Temp. 2" from Edge	0	5.0	1/100	2.0	2	0	5.0	

TABLE 3 - TEST POINT INFORMATION, CP

NOTES:

1. Measurement circuits shall not impress any voltage on the test lines.

2. During any testing using VTP or VP circuits, instrumentation return, umbilical return, 22 VDC return and DC return, must all be made electrically common by GE. Output voltages shall be measured with respect to this common return.

3. Each of these signals is derived from a "T" on the appropriate command input wire. The characteristics of the signals are given in Table 5. The measurement fidelity must be sufficient to identify the presence of a command, to determine how many tenths of a second any non-pulse command is present and to correlate the time of command actuation with the binary vehicle programmer time. Provision must be made by GE for such time correlation.

4. The output impedance for each of these test points is a function of the GE design. The current levels stated in Table 5 and this spec refer to the current drain on the particular command or power input by the EK equipment only. Any current drawn by the measurement circuits must be added to the specified values.

5. Test circuit shall not draw more than 1.0 milliamp.

6. The power supplied by EK on the automatic focus leads A and B is obtained from the +28VDC operational supply and is controlled by relays. Therefore, the output impedance should be negligible.

7. Unless otherwise noted, the accuracy requirement represents the maximum allowable deviation of the recorded and displayed voltages from the open circuit voltages present on the pins of connectors J695 and J696.

8. The total current drawn from all four lines by the measurement circuits shall not exceed 200 microamperes (average of 50 microamperes per line).

9. The output will either be an open circuit or a voltage between the limits shown in the output voltage column with an output impedance as shown in the output impedance column.

10. Although these functions still exist in the CPL, they are not wired (F-6) on the GE side of the interface.

TABLE 4 - UMBILICAL INFORMATION, CP
(Formerly GE Dwg 74E007; EK Dwg. 801-111)

TEST CODE	FUNCTION	OUTPUT VOLTAGE IN VOLTS MIN	OUTPUT VOLTAGE IN VOLTS MAX	REQUIRED FREQUENCY RESPONSE IN CPS	REQUIRED ACCURACY IN % NOTE 8	OUTPUT IMPEDANCE IN KILOHMS MIN	OUTPUT IMPEDANCE IN KILOHMS MAX	REMARKS
BBT 1	Looper Position Umbilical Instrumentation	0	5.0	5	2.0	5.1	10.2	
BBT 2	Drive Frequency Umbilical Instrumentation	0	5.0	0.03	Note 1	0	5.0	Note 2
BBT 3	Stereo Mirror Umbilical Temp.	Note 3	Note 3	1	0.25	Note 3	Note 3	Note 4
BBT 4	Tube Station 177 Umbilical Temp.	Note 3	Note 3	1	0.25	Note 3	Note 3	Note 4
BBT 5	Torque Motor Command Umbilical Instrumentation	0	33.4	1	10.0	9.0	11.0	
BBT 6	Master Umbilical Tell Tale	0	26.0	Note 7	Note 7	1.0	4.7	
BBT 7	Spare Umbilical Instrumentation							Spare
BBT 8	Return for above BBT functions (See Note 6 to umbilical function table).							

Approved for Release: 2024/01/30 C05099027

TABLE 4 - UMBILICAL INFORMATION, CP

NOTES:

1. The required accuracy stated for BBT2 refers to frequency, the quantity being measured.

2. The drive frequency umbilical instrumentation signal consists of an AC signal with a min. amplitude of 1.0 volt peak to peak superimposed on a DC pedestal of 2.5 ±0.5 V. The instantaneous output will be within the range of 0.25 to 5.0 volts positive with respect to DC return. Total harmonic distortion is less than 20% when connected to a 50,000 OHM ±10% resistive load. Signal frequency will vary between 270 and 560 CPS.

3. Resistance measurement from 45 kilohms to 90 kilohms.

4. These circuits each consist of a thermistor between the BBT interface wire and umbilical return.

5. Measurement circuits shall not impress any voltage on the test lines except BBT 3 and BBT 4. The power supplied by GE or BBT 3 or BBT 4 shall not exceed 2 milliwatts.

6. During any testing using BBT circuits, instrumentation return, umbilical return, and DC return must all be made electrically common by GE. Output voltages shall be measured with respect to this common return. This return shall be available at BBT 8.

7. A memory indicator with a minimum input impedence of 1000 ohms shall be connected by GE to the BBT 6 output. The indicator shall have two states - "GO" and "HOLD". A voltage of 5.0 or more volts for 20 or more milliseconds shall cause the indicator to change from "GO" state to the "HOLD" state. The state of the memory indicator shall be displayed by GE in the launch observation building (LOB). Provision shall be made by GE to enable an operator in the LOB to reset the indicator.

8. Except as otherwise noted, the accuracy requirement represents the maximum allowable deviation of the recorded and displayed resistances or voltages from the actual resistances or open circuit voltages present on the pins of connector J698.

TABLE 5 - COMMAND INFORMATION, CF
(Formerly GE Dwg. 74E003; EK Dwg. 801-106)

CODE	FUNCTION NOTE 7	DEFINITION OF A BINARY ZERO	EFFECT OF A BINARY ZERO	DEFINITION OF A BINARY ONE	EFFECT OF A BINARY ONE	REAL TIME	STORED	MAX. CURRENT IN AMPS	NO. WIRES	REMARKS
CB 1	Film Speed Bit No.1	Pulse on CB1b Note 2	Note 3	Note 2 Pulse on CB1a	Note 3	no	yes	0.1	2	Note 8
CB 2	Film Speed Bit No.2	Pulse on CB 2b Note 2	Note 3	Pulse on CB2a Note 2	Note 3	No	Yes	0.1	2	Note 8
CB 3	Film Speed Bit No.3	Pulse on CB3b Note 2	Note 3	Pulse on CB3a Note 2	Note 3	No	Yes	0.1	2	Note 8
CB 4	Film Speed Bit No.4	Pulse on CB4b Note 2	Note 3	Pulse on CB4a Note 2	Note 3	No	Yes	0.1	2	Note 8
CB 5	Film Speed Bit No.5	Pulse on CB5b Note 2	Note 3	Pulse on CB5a Note 2	Note 3	No	Yes	0.1	2	Note 8
CB 6	Film Speed Bit No.6	Pulse on CB6b Note 2	Note 3	Pulse CB6a Note 2	Note 3	No	Yes	0.1	2	Note 8
CB 7	Camera Drive	Pulse on CB7b Note 2	Stop Camera	Pulse on CB7a Note 2	Start Camera	No	Yes	0.1	2	Note 8
CB 8	Stereo, Most Significant Bit		Note 4		Note 4	No	Yes	1.0	3	
CB 9	Stereo, Least Significant Bit	The b & c wires shall be common.	Note 4	The a & c wires shall be common. The b wire shall be open circuited.	Note 4	No	Yes	1.0	3	
CB10	Crabbing, Most Significant Bit	The a wire shall be open circuited	Note 5		Note 5	No	Yes	1.0	3	

Approved for Release: 2024/01/30 C05099027

TABLE 5 - COMMAND INFORMATION, CP
(Continued)

CODE	FUNCTION NOTE 7	DEFINITION OF A BINARY ZERO	EFFECT OF A BINARY ZERO	DEFINITION OF A BINARY ONE	EFFECT OF A BINARY ONE	REAL TIME	STORED	MAX. CURRENT IN AMPS	NO. WIRES	REMARKS
CB11	Crabbing, 2nd Most Significant Bit		Note 5		Note 5	No	Yes	1.0	3	
CB12	Crabbing, Least Significant Bit		Note 5		Note 5	No	Yes	1.0	3	
CB15 (F-9)	Focus Control Power Enable/Disable	Open Circuit on CB15a	Turn Off Focus Drive and Focus Power	+28VDC on CB15a	Turn on Focus Power and Enable Focus Drive	No	Yes	0.2	1	
CB16	Focus Control Mode	Note 6	Switch Focus to Manual Operation	Note 6	Switch Focus to Auto. Opn.	No	Yes	NA Note 6		
CB17	Focus Forward Drive	Note 6	No Action	Note 6	Drive Focus Motor Fwd.	Yes	Yes	NA Note 6	4	See Fig. 1
CB18	Focus Reverse Drive	Note 6	No Action	Note 6	Drive Focus Motor Reverse	Yes	Yes	NA Note 6		
CB20	Slit, Most Significant Bit	The b & c wires shall be common.	Note 11	The a & c wires shall be common.	Note 11	No	Yes	1.0	3	
CB21	Slit, Least Significant Bit	The a wire shall be open circuited	Note 11	The b wire shall be open circuited	Note 11	No	Yes	1.0	3	
CB24	Supply Spool Torque Motor	Open Circuit on CB24a	No Action	+28VDC on CB24a	Energize Supply Spool Brake	No	Yes	1.0	1	

Approved for Release: 2024/01/30 C05099027

TABLE 5 - COMMAND INFORMATION, CP

NOTES:

1. A lower case letter following a code designation indicates a specific interface wire. The code designations are defined in the chart.

2. Pulses shall be $28.0 \begin{smallmatrix}+4.5\\-4.0\end{smallmatrix}$ volts positive with respect to CB1-7c (a common for command bits 1 thru 7) and shall have a duration of 20 $\pm$4 milliseconds.

3. The combination of zeros and ones on CB 1 thru CB 6 determines camera film drive speed. See Table 9.

4. The combination of zeros and ones on CB 8 and CB 9 determines stereo position. See Table 11

5. The combination of zeros and ones on CB 10 thru CB 12 determines crabbing position. See Table 11

(F-9)6. The four output relays associated with CB 15, CB 16, CB 17, CB 18 and the four wires labeled: Automatic Focus Lead A, Automatic Focus Lead B, Focus Motor Lead A, Focus Motor Lead B shall be wired as shown in Figure 3-2. Focus Motor Current shall be less than 0.5 amperes.

7. The information contained in these columns is for reference only and does not constitute a part of the interface agreement.

8. There are two wires associated with CB1-7c (Described in Note 2).

9. The tolerance on the +28 VDC specified herein shall be +4.5 VDC and -1.0 VDC except for CB 24 for which it shall be + 5.4 VDC and -1.0 VDC.

10. The total electrical energy supplied to the camera payload by the commands listed on this drawing shall not exceed 15 watt hours.

11. The combination of zeros and ones on CB 20 and CB 21 determines the slit position. See Table 10.

TABLE 6 - THERMAL INTERFACE
(Formerly GE Dwg. 75R014, EK Dwg. 501-115)

EK-GE INTERFACE REQUIREMENTS
(Referenced Notes Follow Table)

Fig. 3-3 INTERFACE POINT NO.	NAME	CONDUCTANCE WATTS/°F	RESPONSIBILITY	LOCATION STA. NO.	MAX. HEAT FLOW FROM EK (WATTS)	MAX EK BA HEAT FLOW (WATTS)
	Lens Bay					45.30
C 1 (Earth Facing Leg)	Fwd. Mounting Point (Note 20)	0.0455	EK	125	3.33	
C 2	"	"	"	"	7.75	12.15 Total
C 3	"	"	"	"	7.75	
C 4	Aft Mounting Point	0.00941	EK	210	0.76	
C 5	Torsional Restraint System	0.0111	EK	210	0.94	
C 6	EMI Ground Strap (Note 12)	0.00540	EK	150	0.37	
C 7 to C 12	Electrical Cables (EK Test Box to GE)	-	GE	150-170	1.60	
C 13	Dust Shield	0	EK	125	0	
R 1	Vehicle Blanket and Components Inner Walls	-	GE	125-210	29.48	
	Stereo Mirror Bay					
C 14	Dust Shield	0	EK	82-84	0	0

Approved for Release: 2024/01/30 C05099027

TABLE 6 - THERMAL INTERFACE
(Continued)

INTERFACE POINT NO.	NAME	CONDUCTANCE WATTS/°F	RESPONSIBILITY	LOCATION STA. NO.	MAX HEAT FLOW FROM EK (WATTS)	MAX EK BAY HEAT FLOW (WATTS)
C 15	Mating Flange	-	EK	82	0	
C 16	Viewport Boot	0	EK	84-125	0	
	RV					
C 17	Fwd Record Storage Unit Mounts	See Note 4	EK	28	0	

EK COMPONENT TEMPERATURE REQUIREMENTS (Note 10)

SECTION	A FLIGHT CHECKOUT (Note 15)	B PRE-OPERATION (Notes 9 & 15)	C OPERATION	D POST OPERATION (Note 4)	EK COMPONENT MAXIMUM AVERAGE POWER DISSIPATION DURING AN ACTIVE PASS (WATTS)
RV	60° to 90°F	60°F to 90°F	40°F to 90°F	-65°F to 125°F	7
Adapter	60°F to 90°F	60°F to 90°F	40°F to 90°F	-65°F to 125°F	0
Stereo Mirror Bay	60°F to 90°F	65°F to 78°F (Note 21)	65°F to 78°F	-	9
Lens Bay	60°F to 90°F	60°F to 75°F (Note 21)	65°F to 75°F	-	26

Approved for Release: 2024/01/30 C05099027

TABLE 6 - THERMAL INTERFACE

NOTES:

1. GE will provide the environmental heating assemblies in RV, adapter, and the stereo mirror bay. EK will provide the environmental heating assembly in the lens bay as an integral part of EK equipment. In payloads where EK uses thermostats the thermostats will turn their heaters off at 72.8°F max, 69.2°F min, and will turn heaters on no more than 1.8°F below their off points. The max lens bay end-to-end average temp. differential induced by mismatch of EK thermostats shall be 0.6°F. In payloads where EK uses thermistors, the thermistors will turn on at 70.6°F max, 69.4°F min, and will turn heaters off no more than 0.6°F above their "on" point. All thermistors on a payload shall have control temperatures (defined as the arithmetic average of the "OFF" and "ON" points) within a 0.8°F range.

2. The flight heater control nominal temperature is 70°F for the stereo mirror bay and lens bay.

3. The nominal emissivity of all vehicle internal interface radiation surfaces in the stereo mirror bay and lens bay shall be 0.10.

4. Film temperature limitations:

   Period covered: from initial installation of flight film until retrieved film is returned to controlled temperature environment.

   Maximum temperature: 125°F, but the accumulation of temperature over 90°F shall not exceed the following:

$$\int_{t_o}^{t_r} \left[\frac{T(t) - 90}{5} \right]^2 dt \leq 4000 \text{ hrs.}$$

   Where:

   t_o = Time of initial installation of flight film

   t_r = Time of return of retrieved film to controlled temperature environment

   $T(t)$ = Temperature of film at time t, in °F.

5. During all operational phases, the differential between the spatially averaged temperatures of the stereo mirror bay and lens bay shall not exceed 10°F.

6. Conductance values shown are nominal and design tolerances are ±25%.

7. GE mounting bolts at C1 through C3 shall have a maximum thermal conductivity of 5.0 BTU/HR FT °F at 70°F.

8. Deleted

9. Ground conditioning while "on pad" shall allow temperature levels of the payload to be established by the flight heater control systems in the stereo mirror bay and lens bay for a minimum of 24 hours prior to launch.

10. In the EK component temperature table, the operational phases are defined as follows:

    A. Flight Checkout - payload vehicle integration (including flight film) until arrival at pad for terminal countdown.

    B. Pre-Operation - arrival at pad for terminal countdown until lift-off.

    C. Operation - lift-off until after final film windup.

    D. Post Operation - final film windup to film retrieval.

11. Latest revisions of all detailed drawings affecting thermal analysis will be exchanged on a regular basis.

12. The conductance of the EMI ground strap is based on the path length from the test box end to the mounting point on the GE external skin structure.

13. The EK flight heater capability in the lens bay is 62 watts at 28 volts.

14. Deleted

15. GE is responsible for preventing the condensation of moisture on any surface of the EK payload external to the film enclosure during the period from integration until lift-off. For loading of film the temperature of the loading area shall be 70°F ±5°F and the relative humidity shall be 45% ±5%.

16. The design and fabrication of the viewport door shall be the responsibility of GE. The viewport door shall be closed and light tight at all times except during photographic or focusing operations as outlined in this specification. The interface temperatures will be maintained prior to the opening of the viewport door at the start of each orbital pass. Stereo mirror temperature differentials resulting during periods of photographic or focusing operations are a part of EK design responsibility.

17. The design goal for the GE thermal environmental control assembly in the stereo mirror bay is to limit the temperature difference between any two points on the stereo mirror to 2.0°F maximum except:

    1) The temperature difference from the front to back face of the stereo mirror along any local normal to the mirror front face shall be 0.2°F maximum.

    2) The temperature difference between the average front and back surface areas shall be 0.2°F max. at the start of each orbital pass with either photographic or focusing operation. This design is based on passive stereo mirror temperature control.

18. The points of physical contact between GE and EK hardware will be as listed in Table 6 and shown on Fig. 3-3.

19. The total heat flow by conduction to EK from the aft mounting point and the torsional restraint system shall not exceed 0.33 watts. At all other physical contact points between GE and EK, the maximum average temperature at the EK-GE mechanical interface shall not exceed 70°F.

20. The EK design goal for C1 through C3 shall be a 0.0256 watt/°F conductance (each).

21. With a prime ground conditioning supply failure during pre-operation, the temperature requirements shall be 60°F for the stereo mirror bay and lens bay. The prime ground conditioning supply shall be on and all EK thermal requirements met prior to lift-off.

22. During periods when the flight film is installed and the complete film transport system (including R/V, Adapter transport, and supply transport) is not mated, the film path shall be sealed by EK except during required handling periods. During these handling periods with the film path exposed, the ambient temperature shall be $70^{o}F \pm 5^{o}$ and the relative humidity shall be 45% $\pm$5%. When the complete film transport system is mated, the film path is defined as sealed when the environmental requirements defined in this specification are met.

FIGURE 3-1

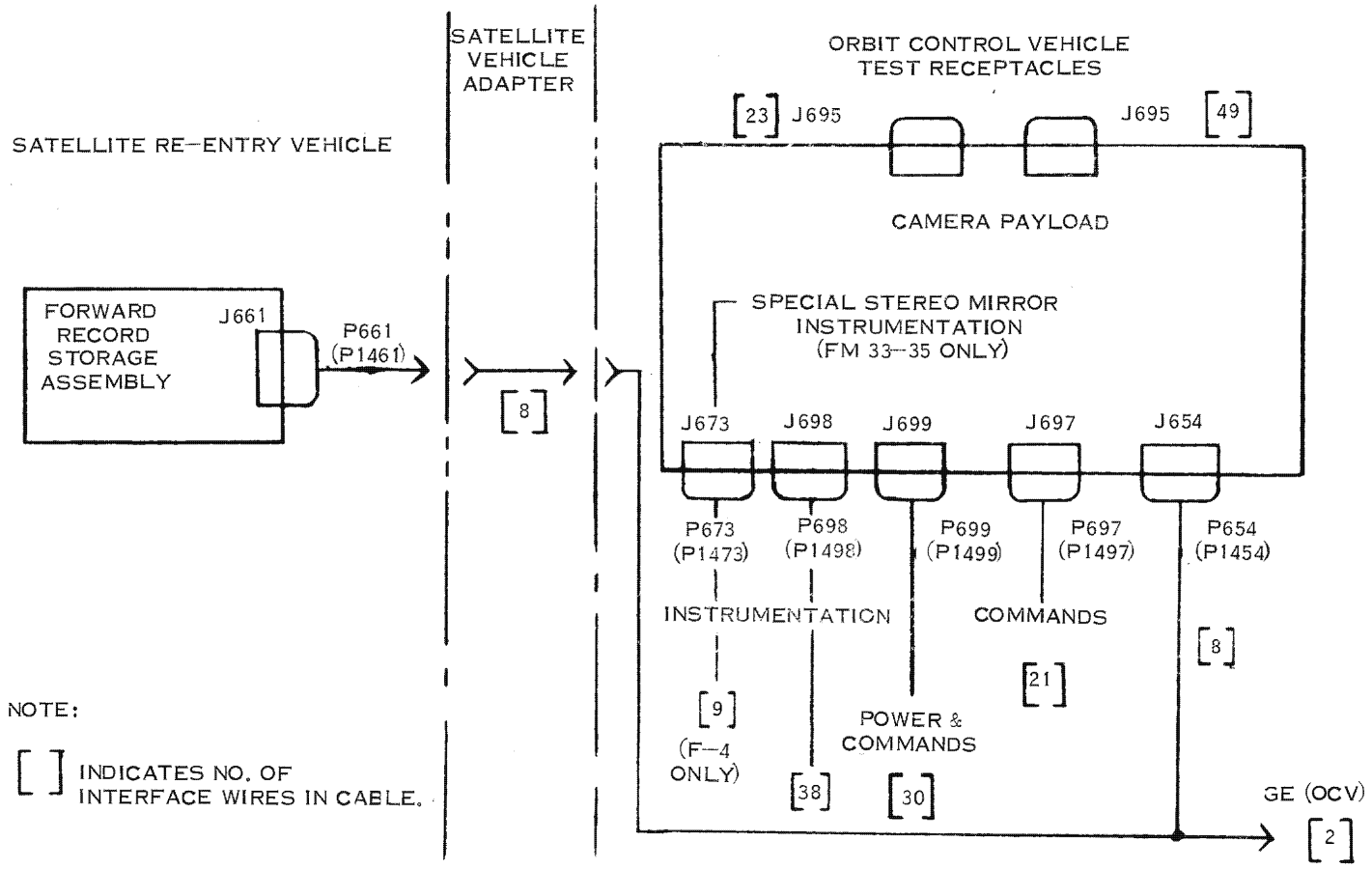

INTERFACE CONNECTORS
BLOCK DIAGRAM
FIGURE 3-1

FIGURE 3-2

(NOTE 6)

FOCUS CONTROL INTERFACE CIRCUITRY

(F-9)

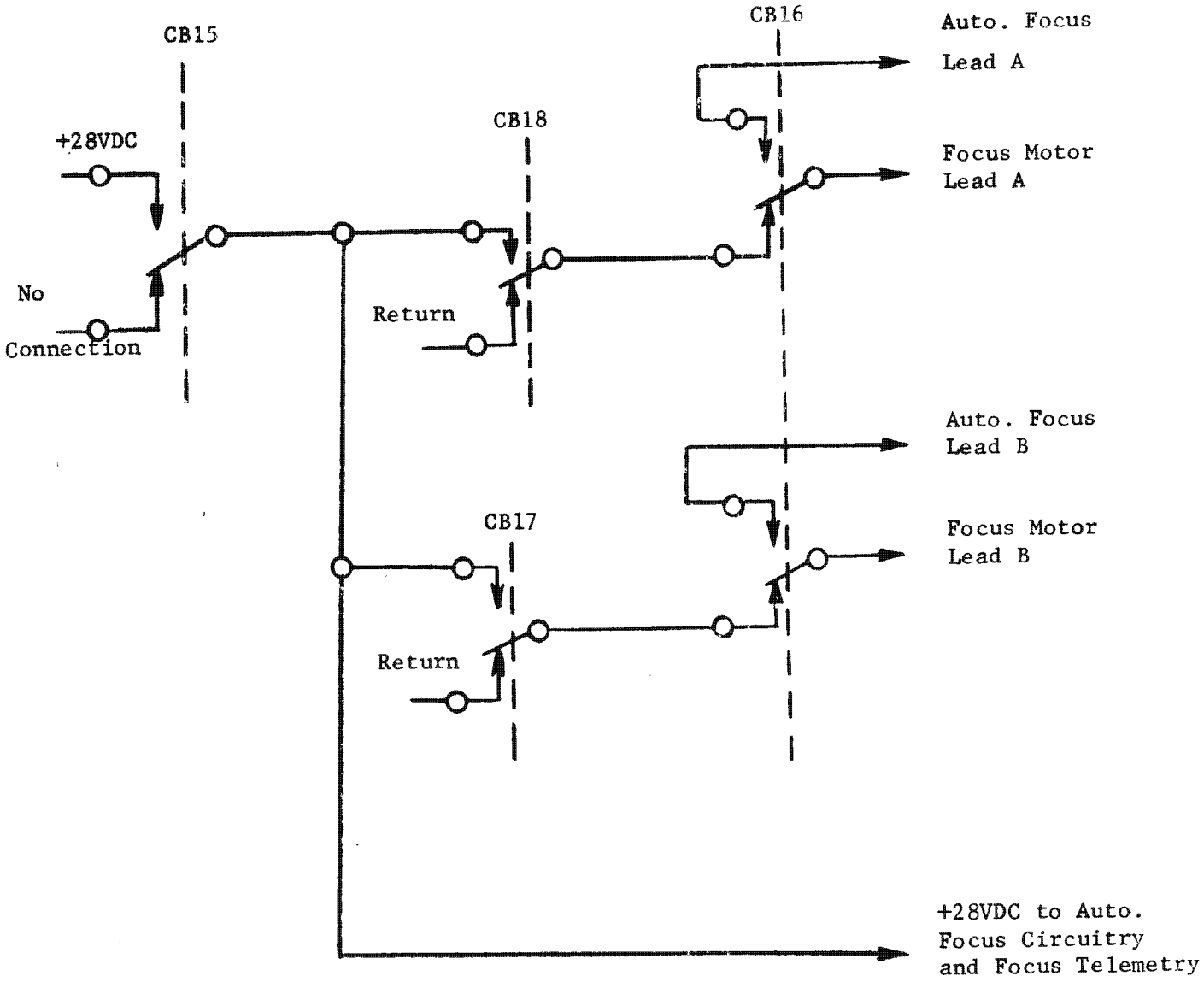

All Relays Shown in Binary Zero Position

FIG. 3-3
THERMAL INTERFACE DRAWING

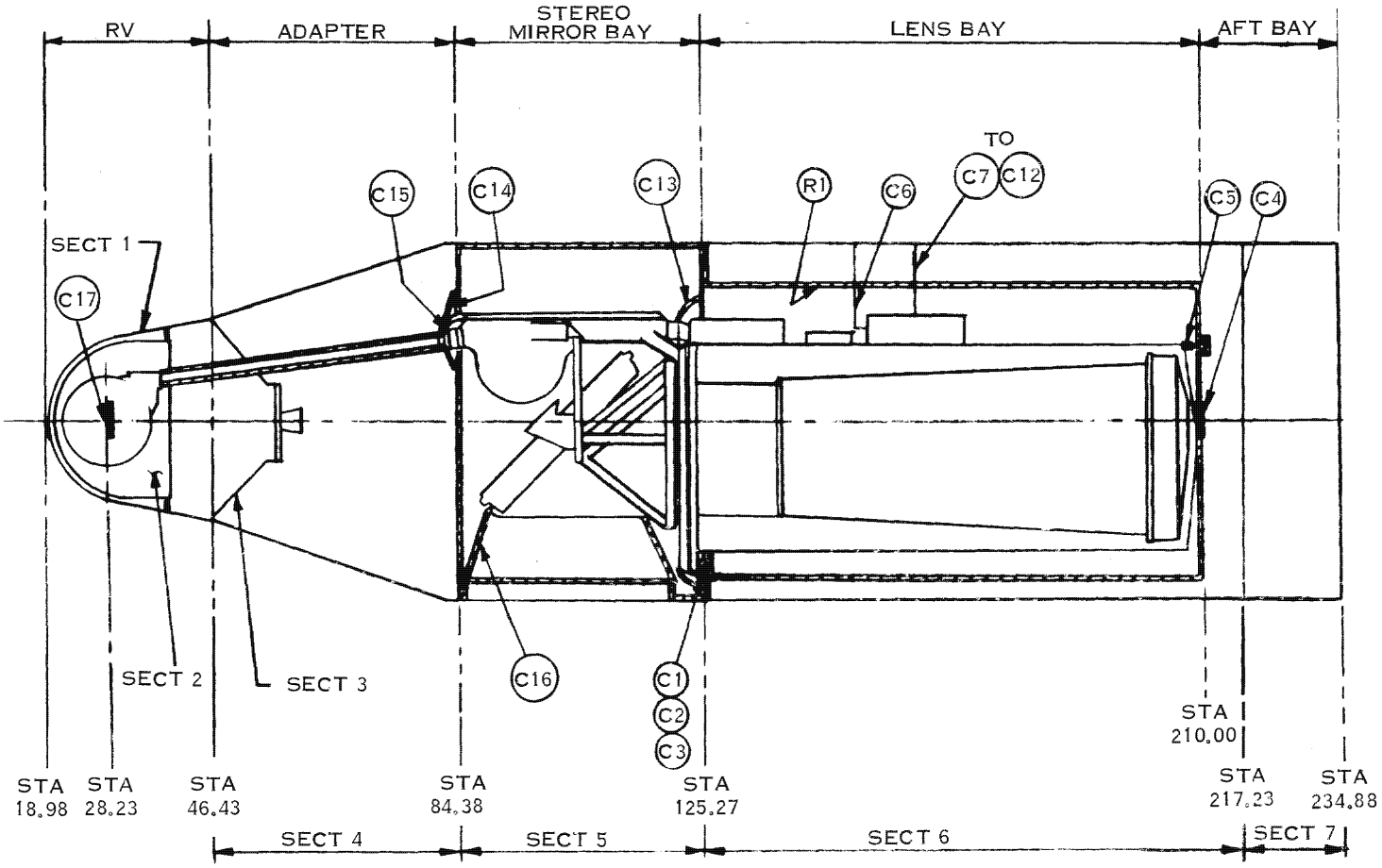

DATA SIGNAL INFORMATION
Figure 3-4

DATA SIGNAL A CONFIGURATION

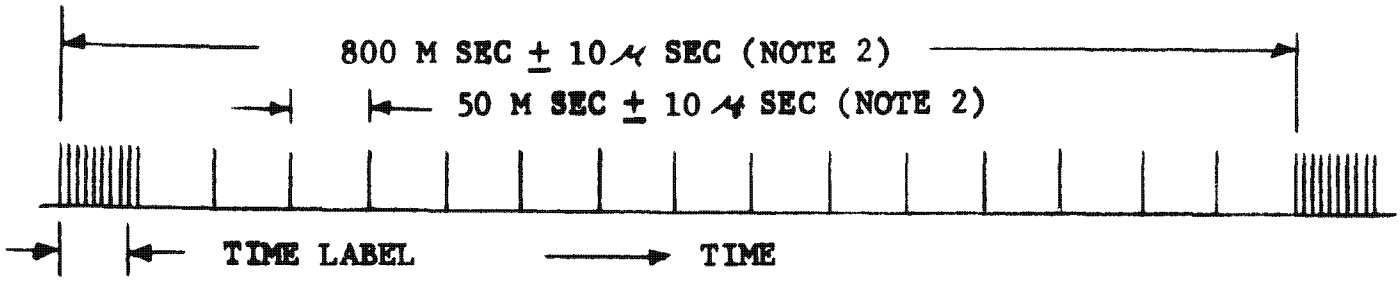

TIME LABEL CONFIGURATION

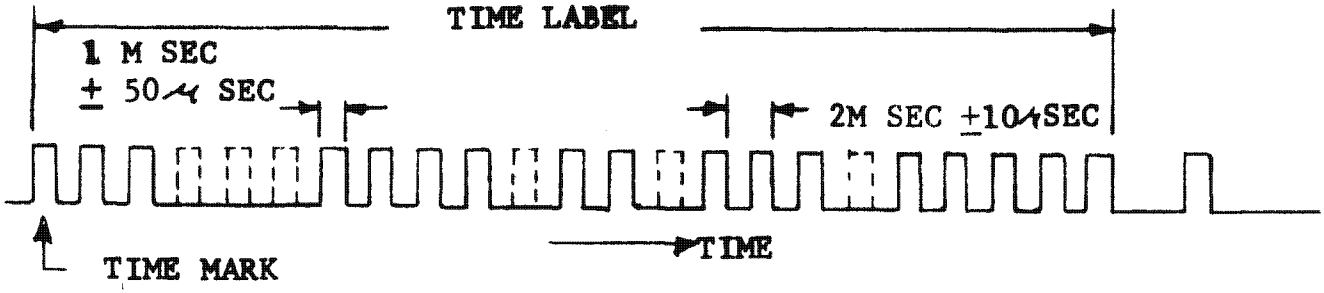

DATA SIGNAL B CONFIGURATION

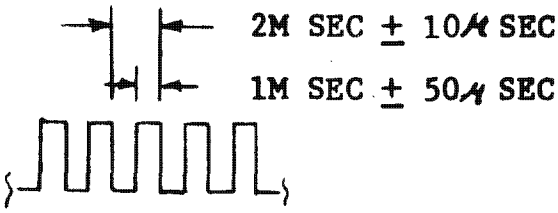

NOTES

1. THE PULSE RISE TIME & THE PULSE FALL TIME SHALL BOTH BE LESS THAN 20μ SEC WITH THE INPUT CONFIGURATION AS SPECIFIED IN NOTE 3.
2. TOLERANCES SHALL BE NONCUMULATIVE
3. CI REPRESENTS EK CABLE CAPACITANCE. CI SHALL BE LESS THAN 50 MICRO-MICRO FARAD
4. VOLTAGE, V, FOR "ZERO" SIGNAL (THE 2N744 CONDUCTING) IS 0.5 ±0.5 VDC. VOLTAGE FOR "ONE" SIGNAL (THE 2N744 NOT CONDUCTING) IS: $\frac{(6 \pm 3\%)}{(1100 \pm 2\%) + R}$ R, WHERE R IS DEFINED AS THE EQUIVALENT EK LOAD IMPEDANCE, R SHALL BE GREATER THAN 3 KILOHMS
5. THE CURRENT IN EACH OF THE RETURN LINES SHALL NOT EXCEED 300 MILLIAMPERES

DATA SIGNAL CIRCUIT CONFIGURATION
Figure 3-5
All Resistances in OHMS

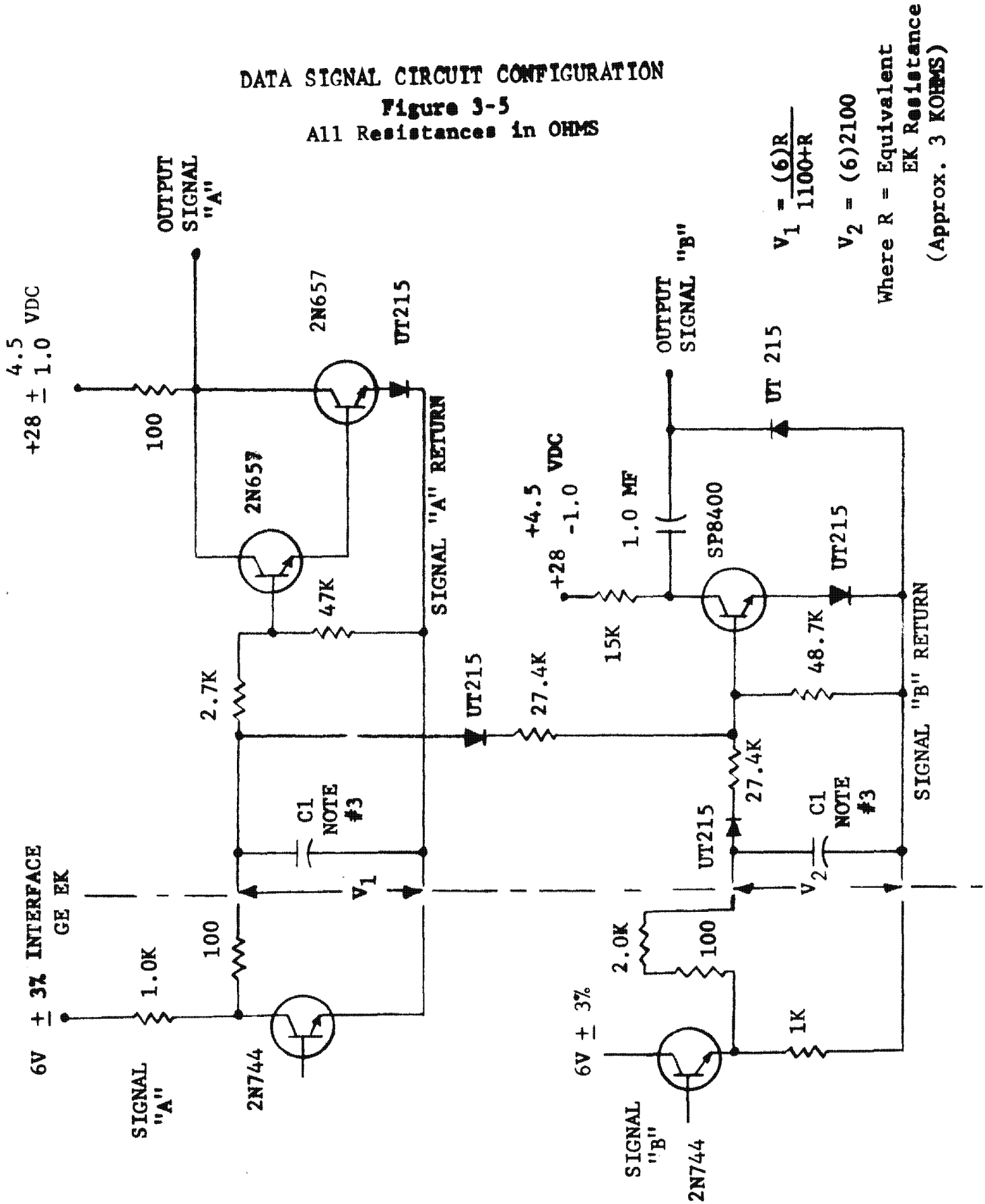

MAXIMUM DIFFERENCE BETWEEN THE OUTPUT VOLTAGE OF THE GE TELEMETRY SYSTEM AND THE CORRESPONDING C/P INSTRUMENTATION INTERFACE VOLTAGE, EXPRESSED AS AN ABSOLUTE QUANTITY (IN VOLTS)

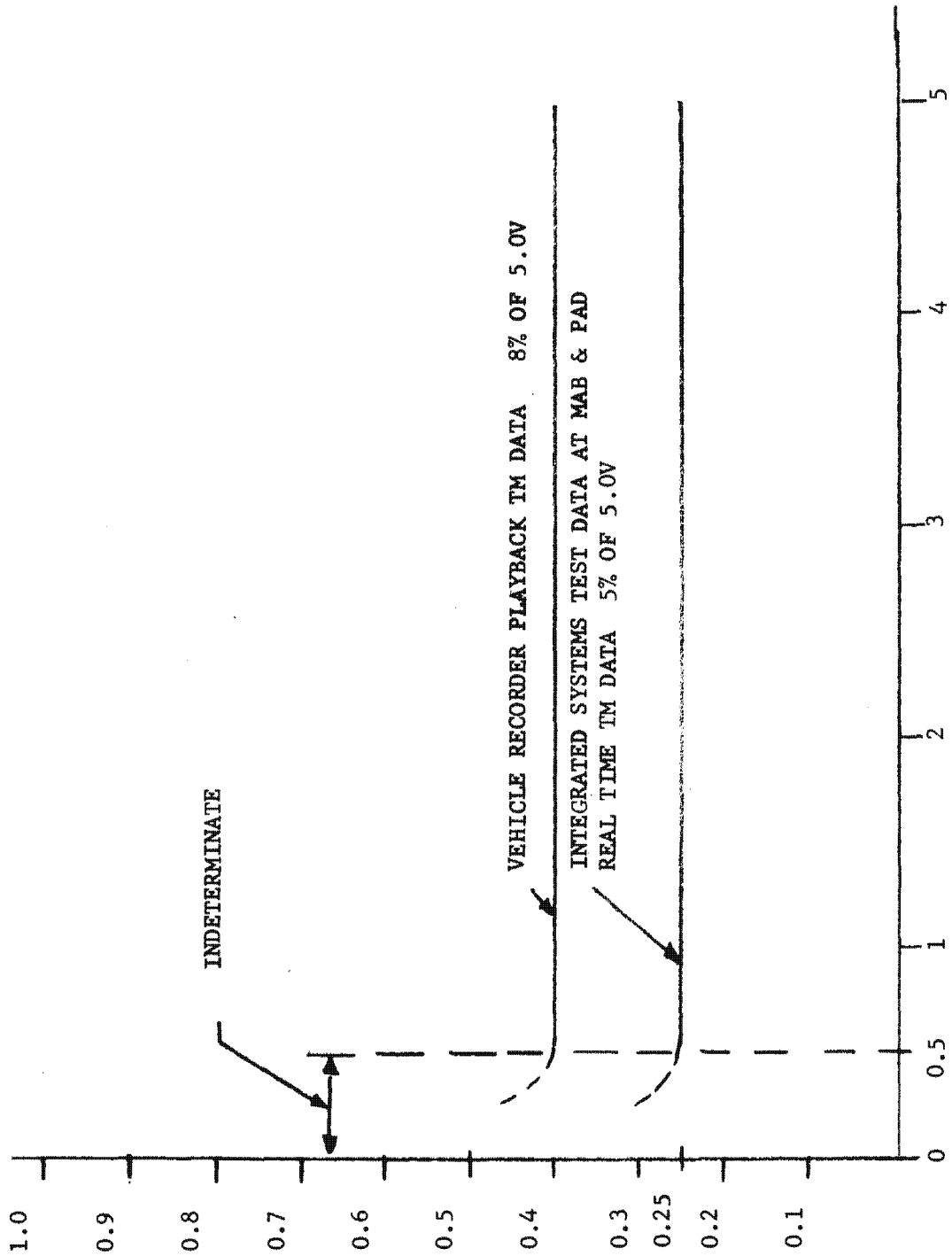

FIGURE 4-2

SECTION 4

AEROSPACE GROUND EQUIPMENT

The AGE to AGE and AGE to flight equipment interfaces between EK and GE are defined herein. These interfaces are specified in terms of the operational phases at which they occur. Each operational phase is treated independently and the equipment requirements are stated in each phase that they are used.

4.1 INSTRUMENTATION AND RECORDING

4.1.1 ANALOG RECORDERS - (CPL's)

Twenty-five (25) analog channels shall be provided for recording the C/P (CPL) instrumentation outputs from the GE SIGME (Satellite Instrumentation Ground Monitoring Equipment). This recording instrumentation may consist of sixteen (16) analog channels for decommutated instrumentation points and a single fast-write channel for twelve (12) commutated temperature points. When the SIGME outputs are not available the (VTP) points which are redundant to the SIGME points shall be recorded. Therefore a patch capability is required to permit attachment of recorders to the (VTP) outputs. Simultaneous recording capability is not required except for calibration and trouble shooting activities.

4.1.2 ANALOG RECORDERS - (VP's)

Twenty-four (24) analog channels shall be provided for recording of the (VP) test points plus spares.

4.1.3 EVENT RECORDERS

Thirty (30) event recorder channels shall be provided for the recording of the command signals from the (VP) test points.

4.2 MAB INTERFACE

4.2.1 GENERAL

4.2.1.1 All the AGE required to transport, handle, checkout, service, orient, and assemble the C/P shall be the responsibility of EK. All the AGE required to transport, handle, checkout, service, orient, and assemble the P/V shall be the responsibility of GE. GE shall be responsible for C/P cleanliness after mating.

4.2.1.2 All the AGE required to transport, handle, checkout, service, orient and assemble the S/V with the installed C/P shall be the responsibility of GE. All the necessary test equipment and/or servicing equipment required for trouble shooting the C/P alone after installation into the OCV or SRV shall be the responsibility of EK.

4.2.1.3 An Electrical Payload Simulator shall be provided by EK to be used to establish electrical interface compatibility between the C/P and the OCV and SRV.

4.2.2 FILM LOADING AND UNLOADING

4.2.2.1 All that AGE required to disassemble the S/V up to the point of access to the Forward Record Storage Assembly, the record supply cassette, and the separation chute assembly shall be the responsibility of GE. For loading or unloading the supply cassette, the film loading access door in the OCV shall be positioned by GE to permit overhead access and loading of the film. The SRV shall be oriented with its X axis vertical (plus X end up) for Forward Record Storage Assembly installation and removal. Any components which obstruct the removal of the Forward Record Storage Assembly shall be removed by GE.

4.2.2.2 EK shall supply the necessary AGE required to remove the test film from the supply cassette and the Forward Record Storage Assembly, load flight film in the supply cassette, check film handling alignment, splice and advance film during threadup, and perform leak rate tests of the film enclosure. The EK AGE shall be designed to operate in the clean environment as specified without contaminating the environment.

4.2.2.3 GE shall furnish operational "+28 volt dc" power, on demand, via the normal C/P-OCV and C/P-SRV power interface connectors during the film threadup operation.

4.3 PAYLOAD INSTALLATION

4.3.1 The installation of the C/P into the OCV shall be accomplished with the OCV longitudinal (X) axis in the vertical position.

4.3.2 EK shall be responsible for the AGE required to orient and position the C/P in the vertical position over the OCV. The deviation between the C/P longitudinal centerline and local gravity vector shall not exceed ± 1.0 degree. An overhead hoist shall be

available by GE for this operation. The crane hook shall be rated at one ton minimum and shall have a safety factor of at least 3. The vertical dimension from the uppermost portion of the OCV when in the vertical position to the bottom of the overhead crane in the full-up position shall not be less than 200 inches.

4.3.3 GE shall be responsible for the AGE required to orient and position the OCV in the vertical position prior to C/P installation. Any provisions required to "guide" the C/P during installation into the OCV shall be provided by GE.

4.3.4 Any necessary AGE required to align the C/P by making coincident the C/P primary structure ring and the socket mounting ring in accordance with the requirements of Drawing #30S2000-I/801-116-I shall be the responsibility of EK.

4.3.5 The SRV shall be oriented with its X axis vertical (plus end up) for installation of the Forward Record Storage Assembly.

4.3.6 The mating of the SRV with the OCV and SVA shall be accomplished with the SRV longitudinal axis in the horizontal position. The SRV longitudinal axis shall be positinned approximately 47 inches from the floor with the Z axis (reference Drawing #30S2000-I/801-116-I) vertical.

4.3.7 The AGE required for splicing and advancing film during installation and leak testing the total film enclosure shall be the responsibility of EK.

4.3.8 All that AGE required to determine alignment of the stabilization reference axis with the C/P reference axis shall be the responsibility of GE. The C/P reference axis shall be defined in accordance with the requirements of the Drawing #30S2000-I/801-116-I.

4.3.9 Alignment of the C/P to P/V

4.3.9.1 Alignment of the C/P Line-of-Sight to the P/V - Eastman Kodak is responsible for aligning and checking the C/P optical axis to the C/P reference mirror. Alignment and checking of the C/P reference mirror with the GE stable platform will be performed by GE, monitored by EK.

4.3.9.2 Film Handling System Alignment

It shall be the responsibility of GE to provide support equipment and to employ procedures which will result in an aligned film handling assembly within the OCV, SVA, and SRV subassemblies, and within the S/V as a completed assembly. It shall be the responsibility of EK to provide support equipment and employ procedures which will check the film handling assembly alignment. GE shall provide access through a hatch opening and chute access port in the SVA to permit viewing the movement of film on the compensator rollers and/or Forward Record Storage Assembly and shall maintain the dimensional requirements for the access port and the relationship of the installed Forward Record Storage Assembly in the installed C/P as defined in GE-EK Drawing 30S2000-I/801-116-I. The P/V shall be oriented with the X axis horizontal and the Y-axis vertical, with the X axis 47 $\pm$3 inches above the floor of the work area.

4.4 C/P ELECTRICAL SIMULATOR

4.4.1 GENERAL

EK shall provide an electrical simulator of the C/P to permit electrical testing of the S/V without utilizing a flight C/P. The simulator shall electrically resemble the C/P in such a fashion that confidence can be established that the OCV and SRV can be mated electrically with the C/P and operated without damage to either. The electrical payload simulator is described in EK Specification #502-208, "Phase II Electrical Simulator."

4.4.2 REQUIREMENTS

4.4.2.1 Electrical

4.4.2.1.1 The input impedance of all command loads, as seen by the OCV or SRV, shall be within the impedance range specified for the flight C/P and shall be continuous during simulator operation.

4.4.2.1.2 The telemetry output impedance shall be within the impedance range specified in Table 2 for the flight C/P and shall be continuous during simulator operation.

4.4.2.1.3 All simulator telemetry outputs may be either electrical signals of occurred functions or may resemble static resistive loads. If the telemetry outputs are static values, the resistive outputs shall be provided as a staircase, ie., each telemetry point shall have a discrete output within the range defined in Table 2.

4.4.2.1.4 The simulator power input impedance, output impedance and demand shall be similar to the nominal C/P specification during all phases of operation. Current surges of the simulated C/P motors and 22 volt power supply shall be similar to the C/P during all phases of operation. Duty cycles shall be simulated as much as possible.

4.4.2.2 Mechanical

4.4.2.2.1 The simulator shall be packaged in a vertical enclosure consistent with good commercial practice. The simulator shall include swivel-type casters with floor locks.

4.4.2.2.2 The simulator shall include associated cables to attach to the OCV and SRV flight harness. The cable length shall be at least twelve feet. All interconnecting cables from the OCV and SRV shall attach to the simulator at its rear by means of connector panel(s) at or near floor level.

4.4.2.2.3 The simulator exterior finish shall be green, color 24300 of Federal Standard 595.

4.4.2.2.4 Desk power cables shall be minimum of twenty feet in length. AC (120V) power plugs shall interface with Crouse-Hinds AR 337 receptacle or a standard three-prong AC plug mold.

4.4.2.3 Functional

4.4.2.3.1 The receipt of C/P commands originating in the OCV shall be indicated on the simulator front panel. The simulator shall confirm that the OCV command has been received and provide means to indicate that the commanded function has occurred.

4.4.2.3.2 All commands, if any, sent to the OCV or SRV from the C/P shall be capable of being manually initiated. This also applies to commands that are directly sequenced as a result of the receipt of a C/P command originating from the OCV.

4.4.2.3.3 Meters shall be provided indicating at least simulator input voltage and current. Meter accuracy shall be within 10% of full scale reading. Test points shall be provided across all voltage meter readings to permit more accurate measurements.

4.5 MAB SIMULATED FLIGHT TEST

4.5.1 All that AGE required to simulate commands, monitor and record system performance, and otherwise support the Simulated Flight Test shall be the responsibility of and supplied by GE.

4.5.2 The integrated S/V shall be positioned in the horizontal position during these tests with the Z axis (reference Drawing 30S2000-I/801-116-I) in the horizontal plane to permit actuation of the C/P crabbing functions.

4.5.3 All C/P instrumentation signals (CPL's, see Tables 1 and 2; test points: VP's and VTP's, see Tables 1 and 3) after appropriate signal processing by GE shall be displayed and recorded on chart recorders by GE within the integrated test area in the MAB. All C/P umbilical points (BBT's, see Tables 4 and 1) shall be monitored, recorded and displayed by GE within the integrated test area in the MAB; the following equipment shall be provided at the MAB by GE for monitoring and recording the C/P signals:

a. Pen type chart recorders to consist of 49 analog pens and 30 event pen markers.

b. One (1) display and reset device for BBT 6 Memory Circuit.

4.5.4 GE shall make provision for an unambiguous time correlation between events recorded and S/V programmer time. The recording and/or monitoring equipment must be capable of meeting the frequency response and accuracy requirements specified in Tables 3 and 4 for the VP, VTP, and BBT measurements. The over-all accuracy of the CPL measurements shall be as specified in Figure 3-6. Sampling rates for the CPL's shall be as specified in Table 2.

4.6 PALC-2 INTERFACE

4.6.1 GENERAL

4.6.1.1 All that AGE required to transport, erect, and mate the S/V to the Agena D shall be supplied by GE. All servicing, controlling, monitoring, and recording equipment required during transport and at the umbilical mast, Missile Service Tower, LSB, and the LOB shall be the responsibility of GE.

4.6.2 SIMULATED FLIGHT TEST

4.6.2.1 The S/V shall be positioned with the longitudinal axis in the vertical plane during this test phase.

4.6.2.2 All C/P instrumentation signals (CPL's, see Tables 1 and 2) shall be transmitted via RF link to the MAB. After appropriate signal processing, the individual signals shall be recorded on pen-type chart recorders by GE in the secure area of the MAB. GE shall make provision for an unambiguous time correlation between events recorded by this equipment and S/V programmer time. It shall be the responsibility of GE to insure that the frequency response and accuracies for the measurement system, from the C/P-OCV and C/P-SRV interfaces to the chart recording, shall be as specified in Figure 3-6 of this document.

4.6.2.3 All C/P test points (VP's and VTP's, see Tables 1 and 3) and instrumentation return from J696 (See Table 1) shall be connected via the S/V and LSB to the LOB and recorded at the LOB by GE on pen-type recorders. Any buffering or filtering networks that may be necessary shall be provided by GE. GE shall make provision for an unambiguous time correlation between events recorded by this equipment and S/V programmer time. It shall be the responsibility of GE to insure that the frequency response and accuracies for the measurement system, from the C/P-OCV and C/P-SRV interfaces to the chart recording, shall be as specified in Table 3.

4.6.2.4 All C/P umbilical points (BBT's, see Tables 1 and 4) shall be connected by GE via the S/V and the LSB to a console in the LOB, and monitored, recorded and displayed in the LOB. Any buffering or filtering networks that may be necessary shall be provided by GE. GE shall provide three (3) analog and three (3) digital recording devices as follows:

a. Voltmeter to measure BBT1 and BBT5 voltages.
b. One (1) device for measuring BBT2 frequency.

c. One (1) Digital Ohmmeter for measuring BBT3 and BBT4.
d. One (1) display and reset device for BBT6 Memory Circuit (specified in Note 7 of Table 4).

GE shall make provision for an unambiguous time correlation between events recorded by this equipment and S/V programmer time. It shall be the responsibility of GE to initially and periodically insure that all measurement requirements specified in Table 4 are met.

4.6.2.5 GE shall be responsible for providing the EK field personnel with a communication network connecting the MAB, LSB, and LOB.

4.6.3 COUNTDOWN MEASUREMENTS

4.6.3.1 All C/P instrumentation signals (CPL's, see Tables 1 and 2) shall be transmitted via the RF link to the MAB. After appropriate signal processing, the individual signals shall be recorded on pen-type chart recorders by GE in the secure area of the MAB. GE shall make provision for an unambiguous time correlation between events recorded by this equipment and S/V programmer time. These measurements shall be made until launch in accordance with the Countdown Manual. It shall be the responsibility of GE to insure the frequency response and accuracies for the measurement system, from the C/P-OCV and C/P-SRV interfaces to the chart recording, shall be as specified in Table 2 and in Figure 3-6 of this specification for real-time telemetry.

4.6.3.2 All C/P test points (VP's and VTP's, see Tables 1 and 3) and instrumentation return from J696 (see Table 1) shall be connected via the S/V and LSB to the LOB, and recorded at the LOB by GE on pen-type recorders. Any buffering or filtering networks that may be necessary shall be provided by GE. GE shall make provision for an unambiguous time correlation between events recorded by this equipment and S/V programmer time. Provision for these measurements shall be made until gantry removal. It shall be the responsibility of GE to insure that the frequency response and accuracies for the measurement system, from the C/P-OCV and C/P-SRV interfaces to the chart recording, shall be as specified in Table 3.

4.6.3.3 All C/P umbilical points (BBT's, see Tables 1 and 4) shall be connected by GE via the S/V and the LSB to a console in the LOB, and monitored, recorded and displayed in the LOB. Any buffering or filtering networks that may be necessary shall be provided by GE.

Equipment shall be provided by GE as specified in paragraph 4.6.2.4. Provision for these measurements shall be made until launch.

4.7 TRACKING STATION INTERFACE

4.7.1 GENERAL

4.7.1.1 All the AGE required to control, monitor, and record the operation of the C/P while the S/V is in orbit shall be the responsibility of and supplied by GE.

4.7.1.2 GE shall supply the necessary manual control equipment to specified tracking sites to control, display, and record the C/P focus system in accordance with the requirements of paragraph 4.7.2.

4.7.2 FOCUS CONTROL EQUIPMENT DEFINITION

4.7.2.1 The orbital C/P focus control equipment shall be in accordance with EK Specification 502-181.

4.7.2.2 The functions to be selected, adjusted, displayed, and recorded by GE AGE are defined in Table 4.7.2.

4.7.2.3 Voltmeters shall be provided to display all CPL points listed in Table 4.7.2. Voltmeters shall have a range from 0 to 6 volts.

4.7.2.4 Recorders shall be provided to record all functions listed in Table 4.7.2. Recorder response shall be at least from 0 to 90 cycles persecond with a sensitivity of 0.1 volt per millimeter. Chart speed shall be adjustable from 1 to 100 millimeters per second.

TABLE 4.7.2

NOMENCLATURE	CODE	SELECT	ADJUST	DISPLAY	RECORD
Operating Equipment Power On/Off	N/A	X		X	
Recorder Power ON	N/A	X		X	
Focus Operator Ready	N/A			X	X
Focus Operation Completed	N/A	X		X	X
Lamp Test	N/A	X		X	
In Contact	N/A			X	
Platen Position Coarse	CPL20			X	X
Platen Position Fine	CPL27			X	X
Focus Output	CPL21			X	X
Focus Forward Channel Output	CPL22			X	X
Focus Reverse Channel Output	CPL23			X	X
Stereo Mirror Differential Temp.	CPL3			X	X
Focus Forward Drive	CB17	X			X
Focus Reverse Drive	CB18	X			X
Focus Command Link GO	N/A			X	X
Viewing Port OPEN	N/A			X	X
Time Remaining to Focus	N/A			X	X

SECTION 5

EXTERNAL & INTERNAL ENVIRONMENTAL DESIGN CRITERIA
(Formerly GE SVS 104Z, EK 502-140)

5.0 SCOPE

5.1 GENERAL

This section establishes the environmental factors derived from the mission profile which govern the design of end items of the Satellite Vehicle. The environmental qualification tests on systems, major elements and components necessary to demonstrate the capability to perform intended missions are established by other documents (for each associate contractor separately) which shall be based upon the environmental levels in this specification with appropriate factors of safety. All conditions defined in this Section are limit conditions unless otherwise noted.

5.2 APPLICABLE DOCUMENTS

The following documents were used as references in preparation of this Section.

5.2.1 Specifications and Standards

5.2.1.1 Federal Government

MIL-E-4970	Environmental Testing, GSE, General Specification for
MIL-E-5272	Environmental Testing, Aeronautic and Associated Equipment, General Specification for
MIL-M-8090	Mobility Requirements, GSE, General Specification for

5.2.2 References

5.2.2.1 Federal Government

AFCRC TR 49-267	ARDC Handbook of Geophysics ARDC Model Atmosphere, 1959
ANC 22	Climatic and Environmental Criteria for Aircraft Design
USAF Specifications Bulletin 523	Space Environmental Criteria for Aerospace vehicles.

5.2.2.2 General Electric Company

SVS 2002	GSE External Environment Spec.

5.2.2.3 Eastman Kodak Company

502-118	Environmental Design Criteria, including Qualification and Acceptance tests for RSRS Payload

5.3 REQUIREMENTS

5.3.1 General

The external environmental conditions, for which the Satellite Vehicle shall be designed, are presented and identified with definite phases of the operational life span of the system. In each phase natural and induced environments are specified. The vehicle shall be designed to withstand only those environments not controlled or excluded by shipping containers, and/or handling fixtures. The internal environment in which components of the system must operate is similarly identified with phases of system life. The internal environment reflects the imposed external environmental conditions modified by design where required. These environments reflect realistic load estimates and do not contain margins unless otherwise noted; margins of safety shall be established in the applicable designs consistent with established reliability apportionments.

5.3.1.1 Nomenclature

The following definitions are used throughout.

5.3.1.1.1 System

An assembly of suboperational entities which together with supporting intelligence can execute a specified mission.

5.3.1.1.2 Subsystem

An assembly of components which function together to comprise a complete suboperational entity within a system.

5.3.1.1.3 Component

An assembly of parts arranged within one package to perform a definite function.

5.3.1.1.4 C/P Major Element

An assembly that is equal to, or exceeds 75 pounds in weight and, by its limited operational capability cannot be considered a system or subsystem. Major elements are: Camera Payload Structure, Lens Assembly, Film Supply Cassette Assembly, Forward Record Storage Assembly with sufficient film to cause the assembly weight to exceed 75 pounds, and Stereo Mirror Assembly.

5.3.1.2 Mission Life Phase Definitions

5.3.1.2.1 Airborne Equipment Mission Phases

The applicable conditions for each of the operational phases are:

A. Transportation and Storage
B. Handling and Assembly
C. Preflight
D. Powered Flight
E. Orbital Flight
F. De-Orbit and Separation
G. Re-Entry
H. Parachute Deployment to Impact
I. Air Snatch
J. Water Impact and Recovery

5.3.1.2.1.1 Transportation and Storage

The Transportation and Storage Phase shall include transport by motor vehicle, aircraft, or any combination thereof from factory to the support center and from the support center or assembly hanger to the launch site. Transportation by rail and unrestricted transportation by aircraft shall not be permitted. The above modes of Transportation and Storage will also have a capability of maintaining the specified temperatures.

5.3.1.2.1.1.1 Transportation from the Factory

The Camera Payload and the Payload Vehicle shall be individually packaged and shipped as subassemblies.

5.3.1.2.1.1.2 Transportation at the Launch Complex

The Satellite Vehicle will be transported between the Missile Assembly Building, and PAD as a complete assembly mounted on a special AGE trailer.

5.3.1.2.1.1.3 Storage

The Payload Vehicle, Camera Payload and/or major subassemblies shall be capable of storage in a sheltered area for specified durations.

5.3.1.2.1.2 Handling and Mating

Handling of the Satellite Vehicle and/or its major subassemblies shall consist of both packaged and unpackaged conditions. The assembly of the Satellite Vehicle shall take place under clean room requirements. This phase shall include the following:

A. Checkout of the Satellite Vehicle and its subsystems.
B. Preparation of the subsystems for mating and checkout to form a Satellite Vehicle.
C. Preparation of the Satellite Vehicle for storage after checkout.

5.3.1.2.1.3 Pre-Flight

The pre-flight phase is that period from removal of the S/V from the AGE trailer; mating to the Agena at the pad until the start of the automatic countdown.

5.3.1.2.1.4 Powered Flight

Powered Flight phase shall include that period of time from start of automatic countdown through shutoff of the Agena engine.

5.3.1.2.1.5 Orbital Flight

The Orbital Flight phase shall consist of free flight around the earth.

5.3.1.2.1.6 Separation and De-Orbit

This phase shall consist of that period in which the Satellite Vehicle is oriented for de-orbit, the Satellite Re-Entry Vehicle physically separates from the Satellite Vehicle Adapter, spin-up, retro-rocket firing, de-spin, thrust cone ejection to re-entry.

5.3.1.2.1.7 Re-Entry

The re-entry phase shall include that portion of the re-entry trajectory from 400,000 feet altitude to ejection of the parachute thermal cover.

5.3.1.2.1.8 Parachute Deployment to Impact

The period during which the parachute opens, the recovery capsule separates from re-entry shield and the capsule and parachute descends to the water is called Parachute Deployment to Impact.

5.3.1.2.1.9 Air Snatch

The primary recovery method is to air snatch the parachute/capsule with a cable strung from an aircraft. When air snatch is successful, conditions of paragraph 5.3.1.2.1.10 would not occur.

5.3.1.2.1.10 Water Impact and Recovery

The period during which the recovery capsule impacts the water surface, immerses in the water, resurfaces and until the capsule is picked up is called Water Impact and Recovery.

5.3.1.3 Environmental Design Criteria

The environmental conditions given in Table 7 apply to S/V design and those given in Table 8 apply to components. The environmental design criteria for the camera payload and its major elements include shock and vibration levels from Table 7 together with all other conditions from Table 8. Thermal environment conditions for components will include the conditions given in Table 7 when a component is exposed to space thermal conditions.

Centain equipment may be unique in their environments. In such cases the applicable equipment specification shall establish the environmental design conditions in precedence to this specification, or as noted in interface technical agreements documents.

The camera payload shall not see shock and vibration loads greater than those encountered during powered flight.

5.3.1.3.1 Variations from 502-118

The applicable values reported in Table 7 and 8 which refer to this paragraph, vary from values stated in EK Spec. 502-118. These values are subject to direction from customer to review by EK.

TABLE 7
EXTERNAL ENVIRONMENTAL REQUIREMENTS

ENVIRONMENTAL FACTORS	A STORAGE AND TRANSPORTATION	B HANDLING AND MATING	C PRE-FLIGHT	D POWERED FLIGHT	E ORBIT FLIGHT
1. Duration	Storage-1yr. except for O-rings, parachutes, pyrotechnics, and batteries. Transport any distance using mechanized carrier	90 dys. max.	6 dys. max.	10 min.	8 dys. max.
2. Vibration	Carrier condition packages (See Note 1) Freq. (cps) — Ampl. 5-27.5 — ±1.3g(o-pk) 27.5-52 — 0.036 inch DA 52-500 — Max.±5g (o-pk)	Negligible	Negligible	GE Combined sinusoidal & random along longitudinal axis only; @ Agena Interface Sine Freq (cps) — g (rms) 5-15 — 0.7 15-20 — 0.7 - 0.4* 20-60 — 0.4 60-65 — 0.4 - 1.0** 65-100 — 1.0 100-300 — 1.5 300-2000 — 2.5 (Sweep rate 1 min/octave) *g decreases linearly as f increases **g increases linearly as f increases. Random (Note 2) Freq.(ΔF) g^2/cps 5-300 — 0.015 300-2000 — 0.030	Negligible

NOTE 1: Levels specified are inputs to base of package in its shipping orientation.
NOTE 2: The random vibration of the specification is mainly attributable to acoustic noise inputs.

Approved for Release: 2024/01/30 C05099027

TABLE 7
EXTERNAL ENVIRONMENTAL REQUIREMENTS

ENVIRONMENTAL FACTORS	A STORAGE AND TRANSPORTATION	B HANDLING AND MATING	C PRE-FLIGHT	D POWERED FLIGHT	E ORBIT FLIGHT
2. Vibration (Cont'd)				(roll off at 12 db/ octave from 1200 to 2000 cps.) A Tolerance of ±50% applied to random levels. GE/EK INTERFACE COMBINED SIN. & RANDOM SIN Sweep rate = 1 octave/min up only Freq.(cps) — Long.Axis (grms) 5-15** — 0.7 15-20 — Range 0.7 to 0.4 20-50 — 0.4 50-60 — Rng. 0.4 to 1.0 60-100 — 1.0 100-300 — 1.5 300-2000 — 2.5 Lateral & Normal Axis (grms) 5-15 — 0.7 15-20 — 0.7 20-50 — 0.7 50-60 — 0.7 60-100 — 0.7 100-300 — 1.5 300-2000 — 2.5 RANDOM Freq. (ΔF-cps) — g^2/cps 20-100 — zero 100-300 — 0.015 300-2000 — 0.03 Roll off 12 db per octave from 1200 to 2000 cps.	

** Low frequency amplitude limited to ½ inch double amplitude.

Approved for Release: 2024/01/30 C05099027

TABLE 7
EXTERNAL ENVIRONMENTAL REQUIREMENTS

ENVIRONMENTAL FACTORS	A STORAGE AND TRANSPORTATION	B HANDLING AND MATING	C PRE-FLIGHT	D POWERED FLIGHT	E ORBIT FLIGHT
3. Sustained Acceleration	Negligible	Negligible	Negligible	(Long.) Atlas Boost 7.5g's Agena 3.0g's	(Lat.) ±2.5g's (Note 3) ±1.5g's Negligible
4. Temperature	$0^{o}F$ air Temp for 8 hr high extreme $+125^{o}F$ (Note 4)	Low extreme (3 sigma) Static ambient air temp $+26^{o}F$ for 8 hr High extreme (3 sigma) $+89^{o}F$	Same as 4B	as per curves Fig. 5-1A to 5-5A	Solar radiation, earth flux, earth albedo, "cold black space." Appendix A.
5. Solar radiation	Negligible	Not Applicable	5 hr increasing from 0 to 105 watts/sq. ft; 1.5 hr at 105 watts/sq ft; 7.5 hr decreasing from 105 to 0 watts/sq. ft; one cycle ea 24 hrs.	Same as 5C	Appendix A Item 1
6. Wind	Max velocity 30 mph, gusts to 40 mph; at velocities greater than 40 mph. Equip. shall be sheltered.	Same as 6A	Appendix B	USAF Handbook of Geophysics	Not Applicable

NOTE 3: Low frequency (less than 50 cps) lateral oscillations plus a true sustained longitudinal acceleration.
Note 4: Precludes shipment by aircraft in unheated and unpressurized compartments.

Approved for Release: 2024/01/30 C05099027

TABLE 7
EXTERNAL ENVIRONMENTAL REQUIREMENTS
(Continued)

ENVIRONMENTAL FACTORS	A STORAGE AND TRANSPORTATION	B HANDLING AND MATING	C PRE-FLIGHT	D POWERED FLIGHT	E ORBIT FLIGHT
7. Pressure 3 Sigma	Storage=31.0 to 29.0 in. Hg abs. Transportation 31.0 to 22.2 in. Hg abs.	30.86 to 29.3 in of Hg abs.	30.86 to 29.3 in.of Hg abs.	30.86 to 4.74 x 10^{-8} in. of Hg. abs. dp=520 mm of dt Hg per min. for first min.	4.74 x 10^{-8} in. of Hg. abs.
8. Shock	Rough handling & loads resulting from transit over improved highways. Conditions as defined in MIL-M-8090D para. 4.5.3 & MIL-E-4970A.	Routing or Bench Handling Shocks on unpackaged equipment resulting from flat drops of 1 inch (Note 4A)	Not Applicable	Longitudinal: Nose up 5 g @ 6 millisec ½ sine pulse shape. Lateral 2.5g @ 6 millisec ½ sine pulse shape S/V Agena Separation Shock: Negligible	Negligible
9. Humidity	Valley Forge(3Sigma) Dew point: -15° to 80°F moisture 0.2 to 10.9 grains/ft^3(2.3 to 148 grains per pound of dry air)	VAFB (3 Sigma) Dew point: 28°F to 72°F Moisture: 1.8 to 8.5 grains/ft^3 (22 to 114 grains per pound of dry air.)	Same as 9B	Same as 9B	NONE

NOTE 4A: Special handling of the Camera Payload and major elements shall prevent shocks from exceeding those specified in paragraph 5.3.1.3.1

Approved for Release: 2024/01/30 C05099027

TABLE 7
EXTERNAL ENVIRONMENTAL REQUIREMENTS
(Continued)

ENVIRONMENTAL FACTORS	A STORAGE AND TRANSPORTATION	B HANDLING AND MATING	C PRE-FLIGHT	D POWERED FLIGHT	E ORBIT FLIGHT
10. Precipitation	Rainfall: 4 in/hr with 40 mph winds, air temp +70°F. Duration: 30 min. Snowfall: Crystals 1-3 mm dia. Max. accumulation rate-4 in/hr; air temp; 0°F Duration: 30 min.	None in MAB & factory.	Same as 10A	Same as 10A except as follows: a) rain up to alt. of 10,000 ft. b)snow up to alt. of 10,000 ft. c)icing conditions ref. ANC-22 instantaneous conditions	NONE
11. Fungus	Fungus as encountered in continental U.S. as specified in MIL-E-5272C	Same as 11A	Same as 11A	Negligible	NONE
12. Acoustic Noise	Negligible	Negligible	Negligible	145+0 db ref.@ 2.9×10^{-9} psia (40cps to 10kc)	NONE
13. Sand & Dust	Negligible(packaged)	Same as C13 except for controlled areas in MAB	Sand: Size range0.01 to 1.0mm dia; density 10 lbs/ft^3 cross section; 40 mph wind @ 5 ft height during an 8 hr period. Dust: Size range 0.0005 to 1.0mm dia; mean density 3×10^{-7} grams/cc; max. density 6×10^{-2} grams/cc; 40 mph wind at 5ft height.	Negligible	NONE

Approved for Release: 2024/01/30 C05099027

TABLE 7
EXTERNAL ENVIRONMENTAL REQUIREMENTS
(Continued)

ENVIRONMENTAL FACTORS	A STORAGE AND TRANSPORTATION	B HANDLING AND MATING	C PRE-FLIGHT	D POWERED FLIGHT	E ORBIT FLIGHT
14. Salt Spray	30 micrograms/meter^3 and Chloride concentration of 20 Mg/liter. Particle size from 0.1 to 30 microns.	Same as 14A	Same as 14A	Negligible	NONE
15. Electromagnetic interference and susceptibility	Not Applicable	(Note 5)	(Note 5)	(Note 5)	(Note 5)

Note 5: All subsystems shall operate satisfactorily both independently and with other subsystems. Operation shall not be adversely affected by interference from external sources. The complete system shall not be a Source of interference which adversely affects operation of other equipment. The limits of interference and susceptibility stated for class 1b equipment in MIL-I-26600 shall apply. (Appendix D)

Approved for Release: 2024/01/30 C05099027

TABLE 7
EXTERNAL ENVIRONMENTAL REQUIREMENTS
(Continued)

ENVIRONMENTAL FACTORS	F SEPARATION AND DEORBIT	G RE-ENTRY	H PARACHUTE DEPLOYMENT TO IMPACT	I AIR SNATCH	J WATER IMPACT AND RECOVERY
1. Duration	5 minutes	6 minutes	30 minutes	Not Applicable	Surface recovery 72 hrs. after impact. 10 hrs operating.
2. Vibration	See powered flight	See powered flight	Negligible	Negligible	Negligible
3. Sustained Acceletation	Longitudinal 5.0 g's towards the nose	Max.Long. Condition Long. -12.7g's Lat.@cg ±4.5 g's pitch about cg ±1.7g's/ft	Not applicable	Not Applicable	Not Applicable
4. Temperature	Same as 4E	1125°R	Air Temp standard 1959 ARDC Atmosphere	Air Temp Standard 1959 ARDC Atmosphere	Extreme: 68°F to 78°F
5. Solar Radiation	Same as 5E	Negligible	Same as 5E	Same as 5J	5 hr increasing from 0 to 105 watts/sq ft; 1.5 hr @ 105 watts/sq ft; 7.5 hr decreasing from 105 to 0 watts/sq ft one cycle ea. 24 hr.
6. Wind	Not applicable	USAF Handbook of Geophysics	USAF Handbook of Geophysics	USAF Handbook of Geophysics	USAF Handbook of Geophysics

Approved for Release: 2024/01/30 C05099027

TABLE 7
EXTERNAL ENVIRONMENTAL REQUIREMENTS
(Continued)

ENVIRONMENTAL FACTORS	F SEPARATION AND DEORBIT	G RE-ENTRY	H PARACHUTE DE-PLOYMENT TO IMPACT	I AIR SNATCH	J WATER IMPACT AND RECOVERY
7. Pressure (3 Sigma)	6.3×10^{-7} to 2.98×10^{-10} in Hg abs.	6.3×10^{-7} to 5.6 in Hg abs. Density see Appendix E	5.6 to 30.86 in. Hg abs	13.7 to 24.0 in.Hg abs.	29.3 to 30.86 in. Hg abs.
8. Shock	Negligible	NONE	16g's long. 1.5g's lat. Duration 0.15 sec. Wave form - Isosceles Triangular	Long: 5 to 20 g's. Lat: 1 to 3 g's.Duration: 1 sec. & 0.1 sec respectively Wave form-Isosceles Triangular	*Axial and lateral condition (Inde-dependent). Max Axial: Long. 15.7g, Lat. 3.1g Max Lateral: Long. 11.4g, Lat. 6.9g. Duration: Triangle wave, 3MS Rise Time, 20MS Overall Base
9. Humidity	NONE	NONE	Dew point: 80°F Moisture: 10.9 grains/ft^3; 148 grains per lb. of dry air at sea level	Negligible	Sea Salt Spray and immersion
10.Precipitation	NONE	NONE	Same as 10D	Same as 10D	Same as 10A
11. Fungus	NONE	NONE	NONE	Negligible	Negligible
12. Acoustic	NONE	156+0,-2db ref; 2.0×10^{-9} psia(40 cps to 10 kc)	Negligible	Negligible	Negligible
13.Sand & Dust	NONE	NONE	Sand: none Dust: Appendix C	Same as 13H	Sand: None Dust: Same as 13C
14. Salt Spray	NONE	NONE	NONE	NONE	Sea salt spray and salt water immersion in sea state 3.
15. EMI Suscept.	Ref Note 5	Ref Note 5	Ref Note 5	Ref Note 5	Ref Note 5

* Reference paragraph 5.3.1.3.1

TABLE 8
INTERNAL ENVIRONMENTAL REQUIREMENTS

A ENVIRONMENTAL FACTORS	B STORAGE AND TRANSPORTATION	C HANDLING AND MATING	D PRE-FLIGHT (See Note 3)	E POWERED FLIGHT
1. Duration	Any distance using mechanized carrier transportation media. S/V equipment, excluding batteries, pyrotechnics, and "O" rings, shall be capable of operation after a storage of one year.	90 days	six day max.	10 minutes
2. Shock	***During shipment and storage the packaged S/V or its major subassemblies is subject to free fall to shop dolly or other surface. Resultant shock at component mounting not to exceed 30 g (ultimate) 11 ms duration, ½ sine wave pulse.	Same as Table 7 8B	Negligible	Long. (Nose up) 10g for 6 ms duration; ½ sine wave pulse Lateral and Normal 5g for 6 ms duration ½ sine wave pulse. Pyrotechnic impulse Negligible
3. Vibration	During transport, the RMS value of acceleration to which internal equipment may be subjected shall not exceed 2 g over entire frequency band. Instantaneous values shall not exceed 6 g peak.	Negligible	Negligible	SINE Freq(cps) — g rms 5-100 — 1.5* 100-300 — 2.0 300-2000 — 2.5 RANDOM GAUSSIAN Freq.Band(ΔF) — G^2/cps** 20-300 — 0.015 300-2000 — 0.03

NOTES:

Note 3: Controlled Environment at Launch Site.

* Low freq. amplitude limited by to ½ inch double amplitude.

** Roll off of 12db/oct from 1200-2000 cps (Pwr. spectral density ±50%)

*** Component shock shall be limited to 15g, when the C/P is integrated in the P/V, by special handling. Component shock may be limited to 15 g's (ultimate) 11 ms duration, ½ sine wave pulse by special packaging and handling when required to assure functional capability of the components.

Approved for Release: 2024/01/30 C05099027

TABLE 8
(Cont'd)

A ENVIRONMENTAL FACTORS	B STORAGE AND TRANSPORTATION	C HANDLING AND MATING	D (See Note 3) PRE-FLIGHT	E POWERED FLIGHT
4. Temperature	Low Extreme of static ambient air temperature + 0°F for 8 hrs. (See Note 5) High Extreme + 125°F Thermal Design See Note 6	At MAB, Factory Low Extreme of static ambient air temp. +65°F High Extreme +95°F Thermal Design See Note 6	Low Extreme flowing ambient air +34°F High Extreme +65°F Max. flowing air temp Thermal Design See Note 6	Low Extreme internal ambient air temp. +34°F High Extreme internal ambient air temp. =130°F Thermal Design See Note 6
5. Sustained Acceleration	Negligible	Negligible	Negligible	Atlas Boost Long 7.5g Lateral ±2.5g Agena Long. 3.0g Lateral ±1.5g

NOTES:

3 Controlled environment at Launch Site

5 This precludes shipment by aircraft in unheated compartments.

6 Thermal Design: Where design includes special specified control on temperature conditions for satisfactory operation, these special conditions shall be defined in technical design specification documents. (See Table 6)

Approved for Release: 2024/01/30 C05099027

TABLE 8
(Cont'd)

A ENVIRONMENTAL FACTORS	B STORAGE AND TRANSPORTATION	C HANDLING AND MATING	D PRE-FLIGHT (See Note 3)	E POWERED FLIGHT
6. Humidity	Reference Table 7 9A Special Control Humidity in vicinity of the camera payload shall be such as to prevent any formation of frost or condensation on the camera payload itself. (Note 3A)	*Special Control: The relative humidity shall be 40± 5.0% during MAB & Factory assy & installation. Same conditions are required for camera payload film installations.	Special Control: Humidity in the vicinity of the payload shall be such as to prevent any formation of frost or condensation on the camera payload itself.	Negligible 35% to 60% in film transport enclosure; no active control.
7. Pressure	STRG. 31.0 to 29.0 in. Hg abs. TRANS. 31.0 to 22.2 in. Hg abs. (Note 3A)	30.86 to 29.3 in. Hg abs.	30.86 to 29.3 in Hg abs	30.86 to 4.74×10^{-8} in. Hg abs film enclosure 0 to 2.5 psid max.
8. Fungus	Equip. shall be capable of withstanding Fungus growth as encountered in continental U.S., and shall be subject to procedures MIL-5272C para. 4.8	Same as 8B	Same as 8B	Negligible
9. Explosive Atmosphere	Negligible	Negligible	Negligible **3ppm(vol) N_2O_4 for 6 days max.	Negligible
10. Sand & Dust	Negligible	Negligible	Negligible	Negligible

NOTE 3: Controlled environment at Launch Site. Per Thermal Interface (See Table 6)
3A: Camera Payload is stored and transported in a pressurized container

* (Reference Table 6)
** Reference paragraph 5.3.1.3.1

TABLE 8
(Cont'd)

A	B	C	D	E
ENVIRONMENTAL FACTORS	STORAGE AND TRANSPORTATION	HANDLING AND MATING	PRE-FLIGHT (See Note 3)	POWERED FLIGHT
11. Salt Spray & Water Immersion	Negligible	Negligible	Negligible	Negligible
12. Electromagnetic Interference Susceptibility	N/A	(See Note 6.1)	(See Note 6.1)	(See Note 6.1)
13. Acoustic Noise	Negligible	Negligible	Negligible	135 +0 -2 db (40 cps to 10kc) ref: 2.9×10^{-9} psia

NOTES:

3 Controlled environment at Launch Site.

6.1* All subsystems shall operate satisfactorily both independently and with other subsystems. Operation shall not be adversely affected by interference from external sources. The complete system shall not be a source of interference which adversely affects operation of other equipment. The limits of interference and susceptibility stated for class Ib equipment in MIL-I-26600 shall apply; with deviations as specified in SVS 4364.

* Reference paragraph 5.3.1.3.1

TABLE 8
(Cont'd)

ENVIRONMENTAL FACTORS	F ORBIT FLIGHT	G SEPARATION DE-ORBIT	H RE-ENTRY	I PARACHUTE DEPLOYMENT TO IMPACT	J AIR SNATCH	K WATER IMPACT & RECOVERY
1. Duration	8 days max.	5 minutes	6 minutes	30 minutes	negligible	Surface recovery within 72 hrs. after impact, 10 hrs operating.
	*Axial & Lateral Condition (Independent). Max. Axial: 25.6g peak shock. Max.Lateral: 21.2g peak shock. Duration: Triangle wave,3MS Rise Time, 20MS overall base. Above data result from external env. data Table 7, Item 8, Column J with amplification factor = 1.6.					
2. Shock	Negligible	Negligible	NONE	16g's long. 1.5g's lateral Duration 0.15sec Wave form Isosceles Triangular	5&20g's Long. 1&3g's Lat. Duration 1.0 & 0.1sec.respectively Wave form Isoseles Triang.	Condition (Independent) Max. Axial Peak shock, 25.6g Max Lat. Peak shock 21.2g Duration, Trian. wave, 3 millisec rise time, 20 millisec overall base.
3. Vibration	Negligible	See Powered Flight	See Powered Flight	Negligible	Negligible	Negligible
4. Temperature	Components to be subjected to local mean radiation sink temp.from $0^{o}F$ to $160^{o}F$ & local mean conduction sink temps. from 80 to $-100^{o}F$	Same as 4F	Low extreme $60^{o}F$,High** extreme $125^{o}F$	Air into vent: Low extreme-$65^{o}F$ High extreme +90 ^{o}F, depending on altitude.	Same as 4I	Air temp: Low extreme $+62^{o}F$, High extreme $+92^{o}F$ Water Temp: $68^{o}F$ to $78^{o}F$
	Thermal Design (see Note 6)	Thermal Design (see Note 6)	Thermal Design (see Note 6)	Thermal design (see Note 6)	Thermal Des. (see Note 6)	Thermal Des. (See Note 6)

* Reference paragraph 5.3.1.3.1
** Local sink temperatures depend on local re-entry heat properties

TABLE 8
(Cont'd)

ENVIRONMENTAL FACTORS	F ORBIT FLIGHT	G SEPARATION AND DE-ORBIT	H RE-ENTRY	I PARACHUTE DEPLOYMENT TO IMPACT	J AIR SNATCH	K WATER IMPACT & RECOVERY
5. Acceleration	Negligible	Longitudinal 5.0g's towards the nose	Max.Condition Long.-12.7g's Lat.@C.G.±4.5g's Pitch about C.G. ±1.7g's/ft	N/A	N/A	N/A
6. Humidity	Negligible **F.T.E.(See below) 35% to 60% No active control	Negligible	Negligible	100% humidity w/condensation	Same as 6I	Same as 6I
7. Pressure	4.74×10^{-8} in. Hg abs. Record sys. 0.25 to 1.25 psia	2.98×10^{-10} 6.3×10^{-7} in. Hg abs.	6.3×10^{-7} to 5.6 in. Hg abs.	5.6 to 30.86 in. Hg abs.	13.7 to 24 in. Hg abs.	29.3 to 30.86 in. Hg abs.
8. Explosive Atmosphere	Negligible *3ppm (vol) N_2O_4	NONE	NONE	NONE	NONE	NONE
9. Sand & Dust	NONE	NONE	NONE	NONE	NONE	NONE
10. Fungus	NONE	NONE	NONE	NONE	NONE	NONE
11. Salt Spray	NONE	NONE	NONE	Negligible	Negligible	Negligible
12. Electromagnetic Interference & Susceptibility	See Note 6.1	See Note 6.1	See Note 6.1	See Note 6.1	See Note 6.1	See Note 6.1

* Reference paragraph 5.3.1.3.1
** Film Transport Enclosure
Note 6: THERMAL DESIGN: Where the design includes specific control on temperature conditions for satisfactory operation these special conditions shall be defined in technical design specification. (See Table 6)

13. Acoustic	NONE	Negligible	145^{+0}_{-2} db ref: 2.9×10^{-9} psia (40 cps to 10 kc)	Negligible	Negligible	Negligible

Approved for Release: 2024/01/30 C05099027

SECTION 5

APPENDIX A

ORBITAL & POWERED FLIGHT DATA

1. Solar Radiation - The nominal value of the solar constant is 440 BTU/hr, ft^2. The 3 sigma limit for the solar constant is ± 13.2 BTU/hr. ft^2. The variation in solar constant for various times of the year is an additional $\pm 3.4\%$.

TYPE	WAVELENGTH - A	ENERGY - %
Ultraviolet	1 to 2,000	Less than 0.2
Ultraviolet	2,000 to 3,800	7.4
Visible	3,800 to 7,000	41.
Infrared	7,000 to 10,000	22.
Infrared	10,000 to 20,000	23.
Infrared	20,000 to 100,000	6.0

During eclipse period of a satellite, solar radiation and earth's albedo are absent. Space radiation temperature is assumed as $0^{o}K$.

2. Meteors - Particle densities shall be assumed to be given by:
No. of Particles = $\frac{3.5 \times 10^{-21}}{m}$ per cm^3 above the selected mass,

where

m - particles mass in grams and is assumed to range from 10^{-13} grams upwards.
Relative velocity - average is assumed at 40 KM/sec.
Meteor Showers: - Known meteor showers can represent a considerable hazard to space vehicles, however, based on their known periodicity and location, they may be avoided by appropriate launch timing. Therefore, meteor shower considerations are considered negligible.

3. Earth Emitted Flux - The nominal value of earth emitted flux is 68.2 BTU/hr ft^2. The 3 sigma limit for earth emitted flux is ± 20.0 BTU/hr. ft^2.

Earth's Albedo Factor - The nominal albedo value is 0.38. The 3 sigma limit for albedo is ± 0.18.

4. Magnetic Field - The earth's magnetic field decreases in intensity with altitude varying as the cube of the distance from the earth's center. The approximate range in intensity at altitude of 125 nautical miles is (milligauss):

Equator	280
Poles	560

5. Ionizing Radiation

a) Van Allen Belt - Van Allen radiation is estimated to be of negligible effect in view of the mission altitude and duration.

b) Cosmic Radiation - General high-energy radiation levels occurring at a nominal altitude of 125 nautical miles has been estimated to be:

Average Energy	3.6×10^9 electron volts
Maximum Flux Density	2 particles/sq. cm/second

Such radiation levels are considered to be of negligible consequence for structural and electronic parts of materials.

6. References - Principal sources for the material contained in the Appendix are:

ARDC	Handbook of Geophysics
USAF	Specifications Bulletin 523
GE/MSD	Handbook of Satellites and Space Travel

7. Curves for 4D, Table 7. Figs. 5-1A to 5-5A attached. (These curves are based on data from PIR 1142-206, -207, -208, -226, and -284).

8. Curves for 4E, - Table 7

9. PIR ATE 8151-127, "Establishment of Design Criteria for Solar, Earth Radiating and Earth Albedo Flux Effects for Earth Orbiting Vehicles", G. Haverly, 3/12/62.

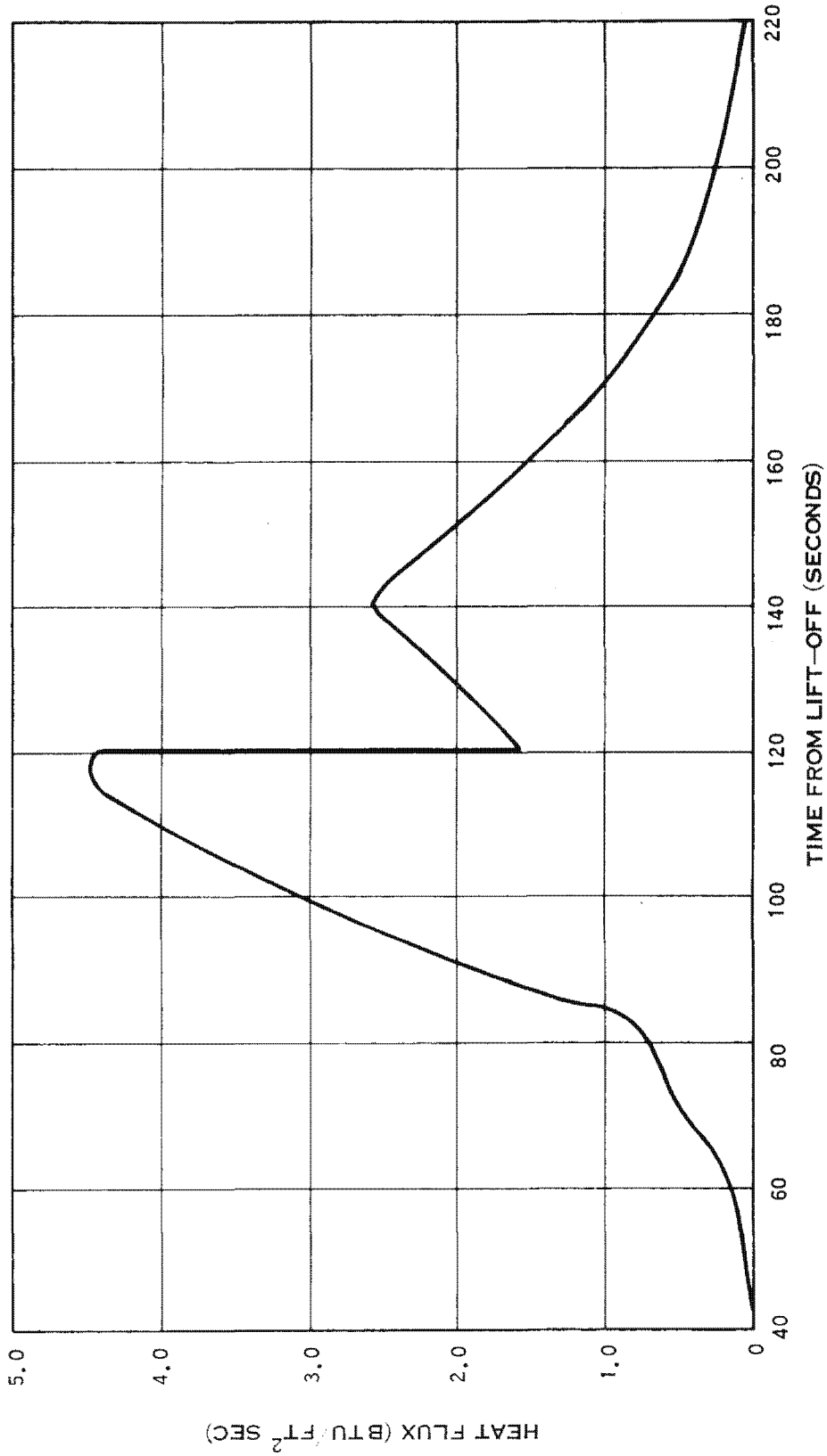

Figure 5-1A. Typical Powered Flight Heat Flux Over A-83 Adapter

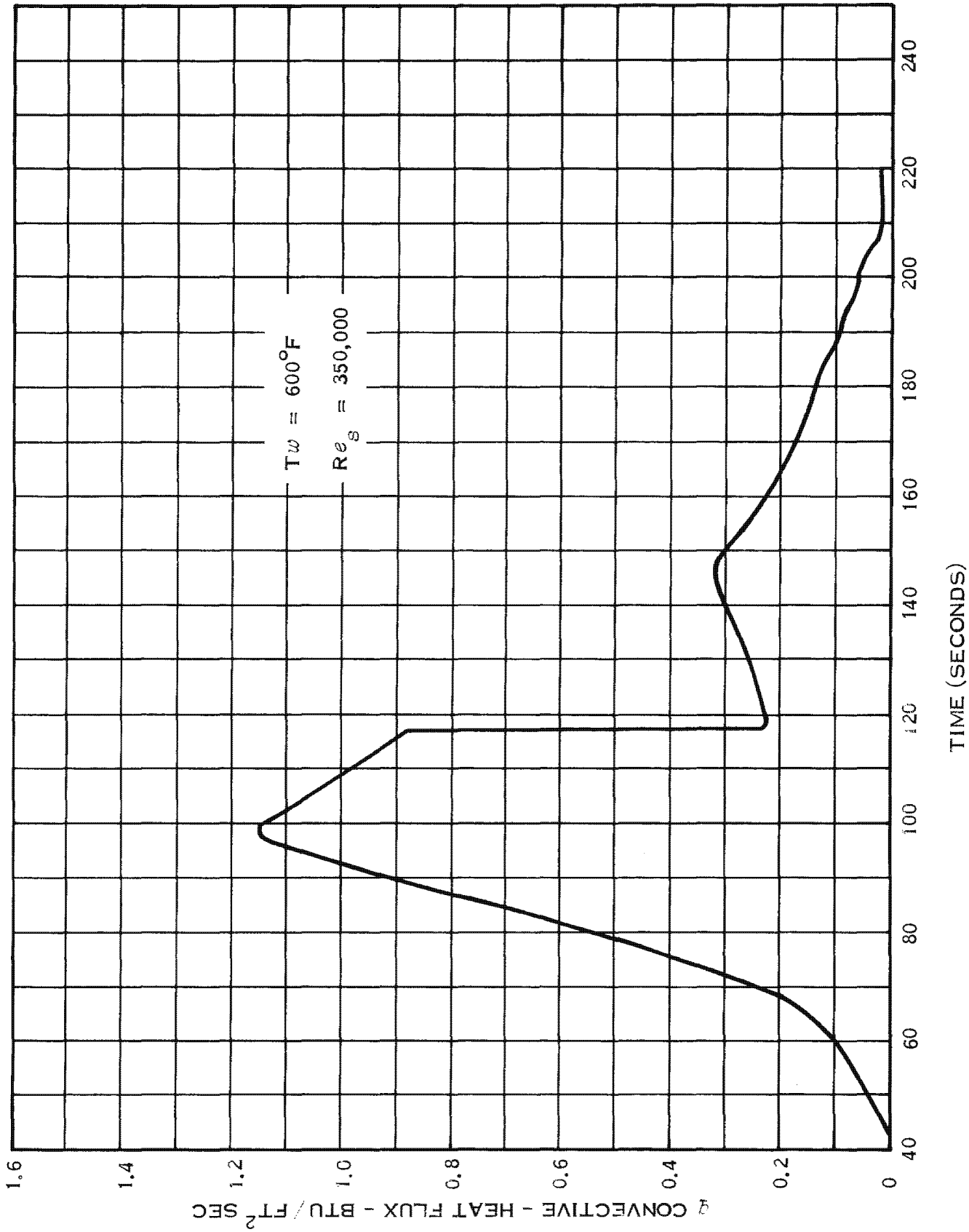

Figure 5-2A. Gross Heat Fluxes During Powered Flight at Station 125; Case 36: Hot Trajectory

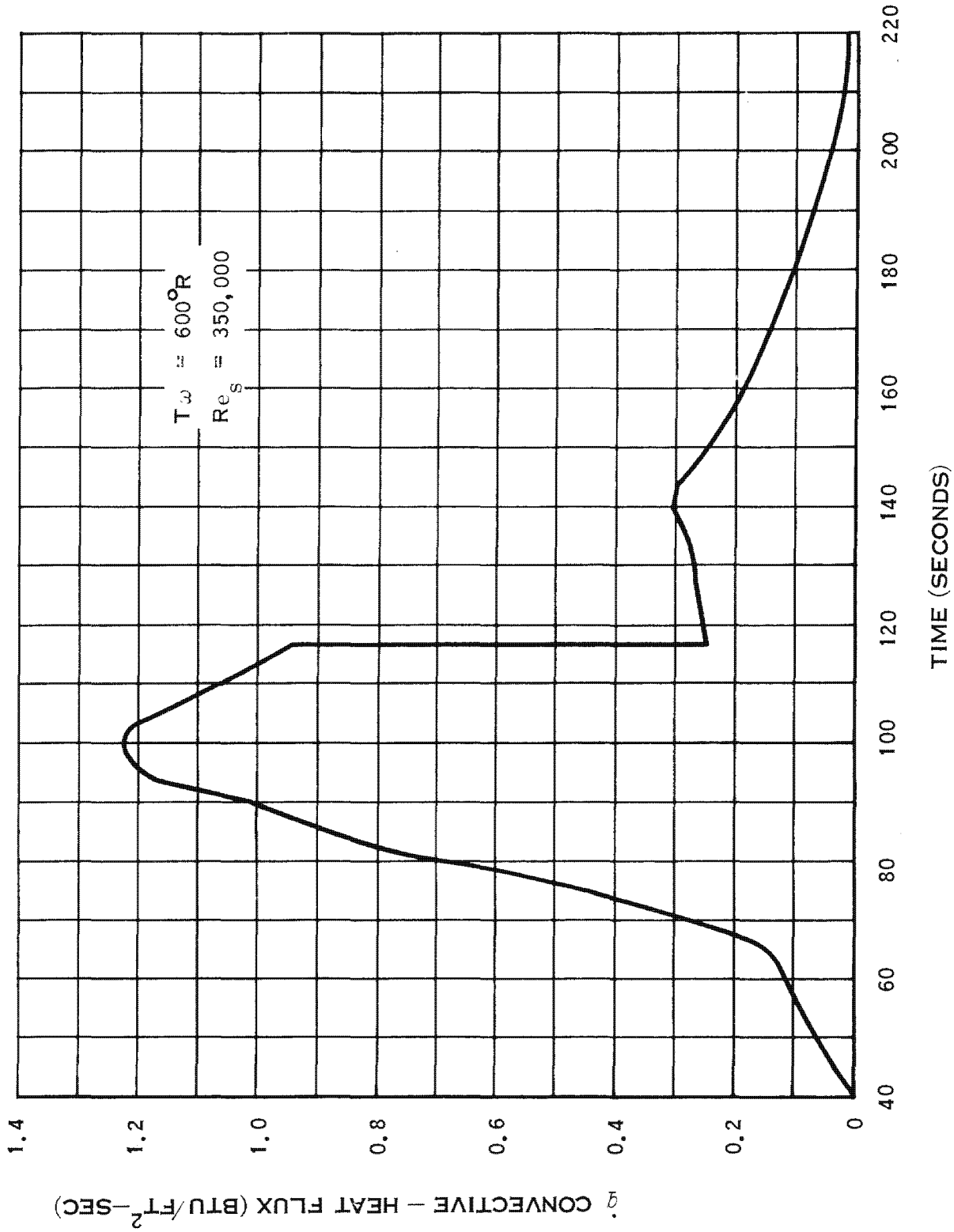

Figure 5-3A. Gross Heat Fluxes During Powered Flight at Station 140; Case 86: Hot Trajectory

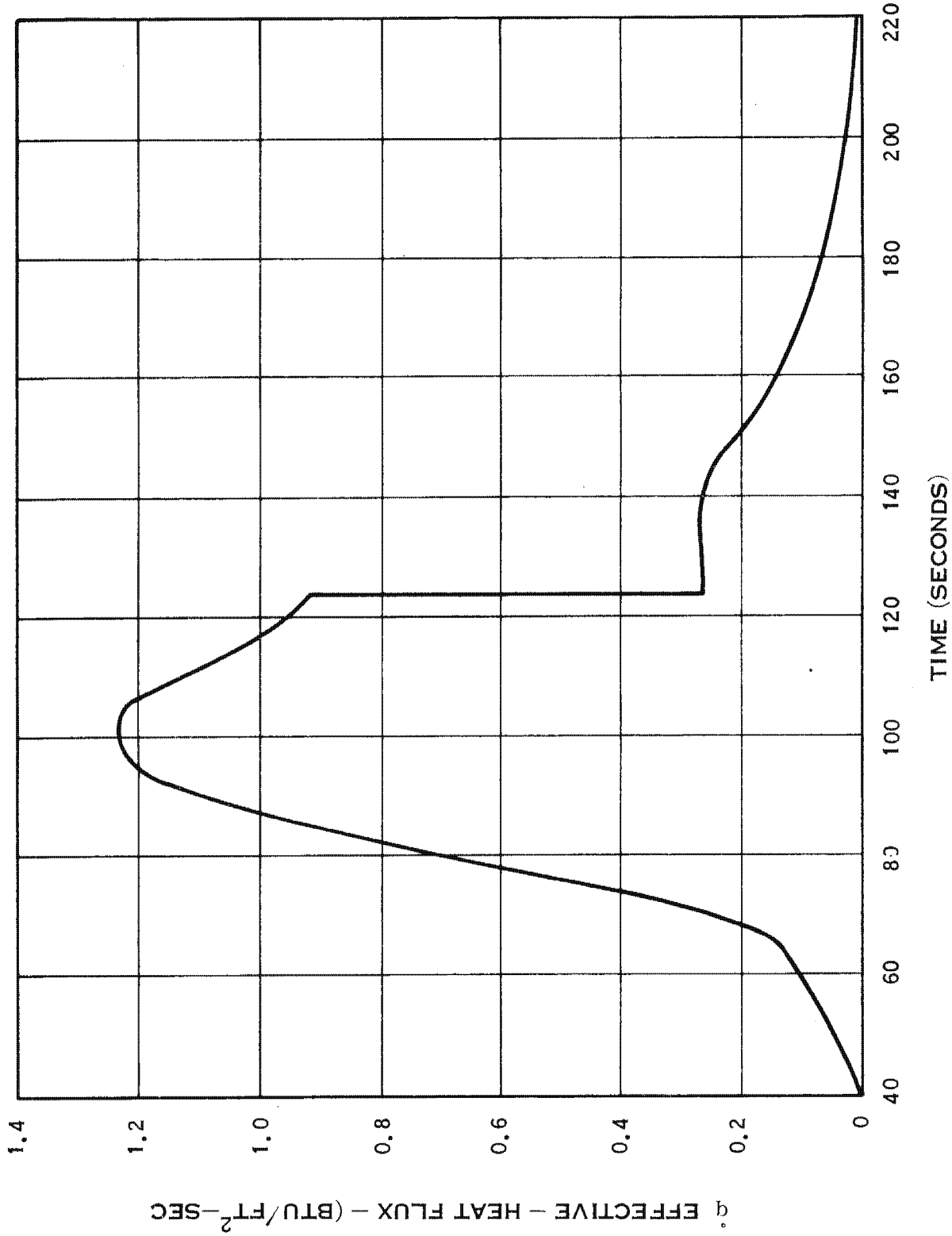

Figure 5-4A. Gross Heat Fluxes During Powered Flight at Stations 209 and 211; Case 86: Hot Trajectory

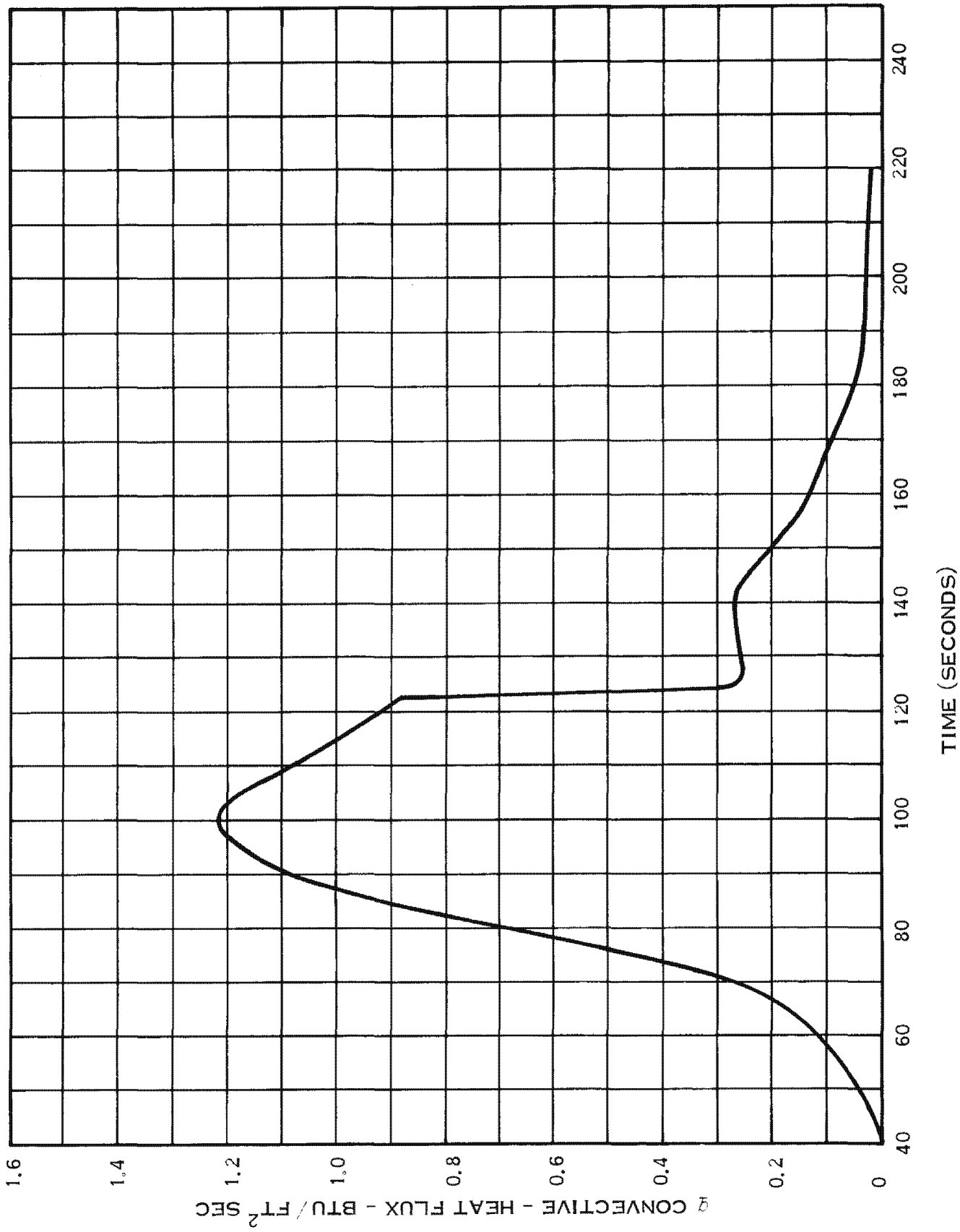

Figure 5-5A. Gross Heat Fluxes During Powered Flight at Station 228; Case 86: Hot Trajectory

SECTION 5

APPENDIX B

B1 ATLAS/AGENA GROUND WIND RESTRICTIONS FOR PRELAUNCH AND LAUNCH

Information recently received from the Customer states that a System Design Ground Wind, as such, has not been established for Program 206. The latest Atlas/Agena surface wind restrictions have been provided, however, for our information. This information supercedes the data provided on Page 330 of the 206 Program Requirements Document, dated 1 May 1962.

The allowable ground winds have been computed from the results of present wind tunnel tests at NASA-Ames. These results for Program 206 are based on assumed scaling laws and structural damping as obtained from full scale tests on an operational Atlas. The maximum allowable recorded surface wind from any direction using an AN/GMQ-11/Anemometer shall not exceed the following values, listed in MPH. (Note: Minimum Phase II LO_2 tanking pressure 4.0 psi):

	MAX ALLOWABLE SURFACE WIND IN MPH						
	Anemometer Ht above ground (ft)						
	10	15	25	50	64	75	90
Atlas Empty - Agena Empty	35.5	35.9	37.9	41.5	42.6	43.2	32.9
Atlas Empty - Agena Full	28.9	31.0	32.7	35.9	36.8	37.3	37.9
Atlas Fueled - Agena Full	25.8	27.7	29.2	32.0	32.8	33.3	33.8
Atlas Full - Agena Full	24.8	26.5	28.0	30.7	31.4	31.9	32.4

SECTION 5

APPENDIX C

ALTITUDE VARIATION of TERRESTRIAL DUST

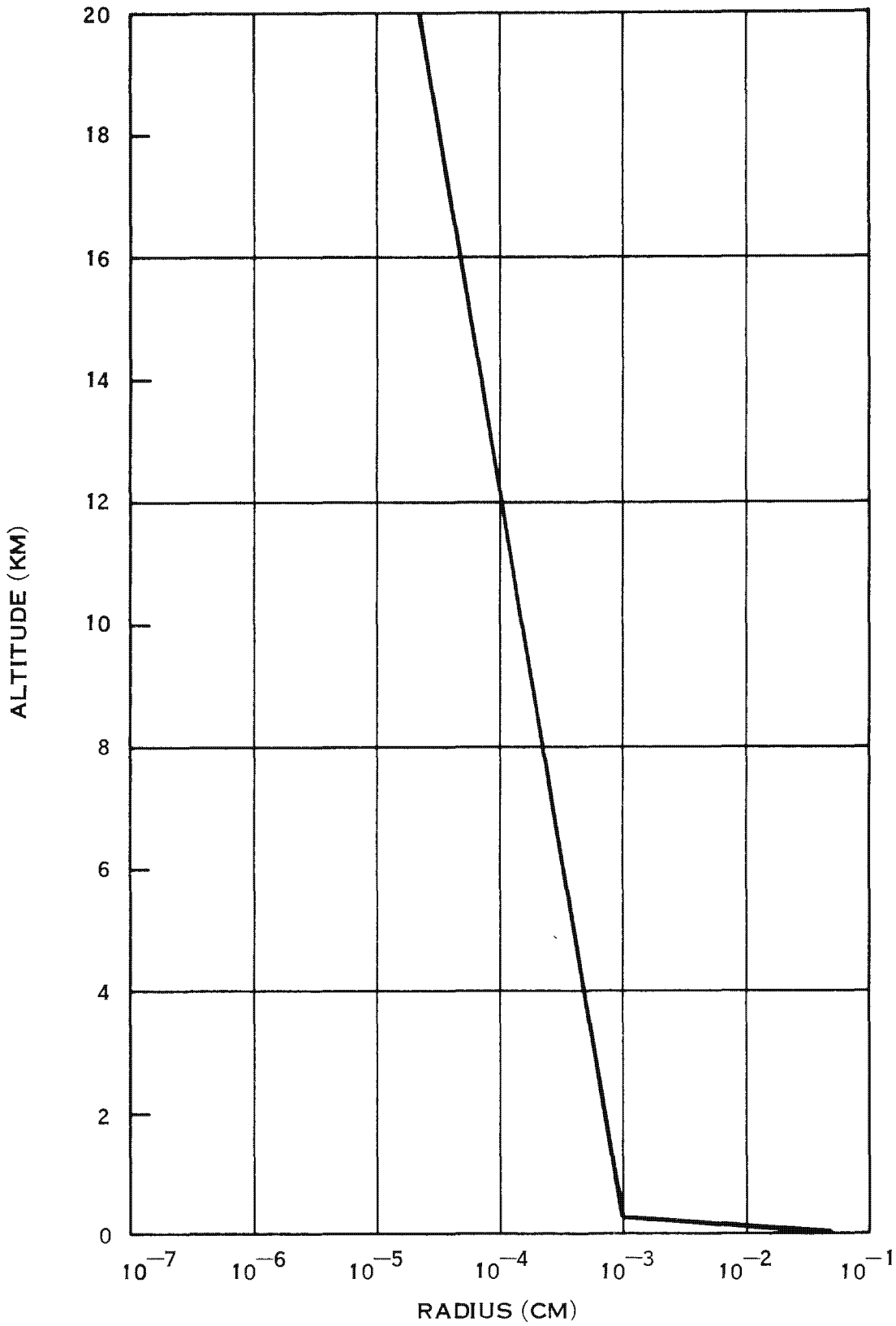

Figure 5-C1. Maximum Dust Particle Size vs. Altitude

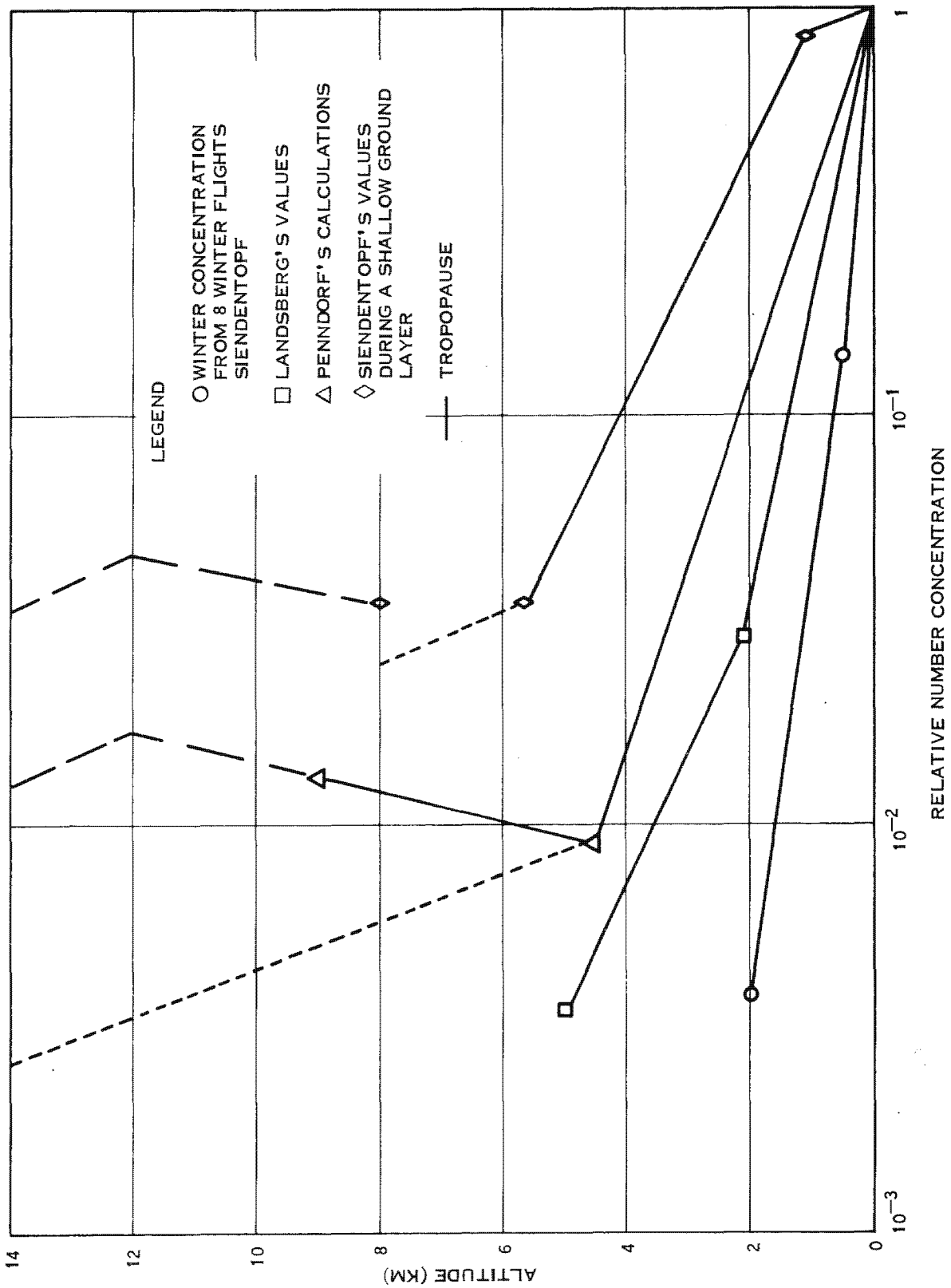

Figure 5-C2. Dust Particle Concentration vs Altitude

SECTION 5

APPENDIX D - EMI DATA

Possible External Electromagnetic Interference During Prelaunch & Powered Flight

FREQUENCY (mc)	POWER (Watts)	DISTANCE (x1000 ft) from PALC-2	ANTENNA GAIN(db)	HALF-POWER BEAM WIDTH (degrees)
236.6	100 avg	38		
255.6	100 avg	38		
259.3	100 avg	38		
274.8	100 avg	38		
290.9	100 avg	38		
295.5	100 avg	38		
347.1	100 avg	38		
372.2	100 avg	20		
375.36	1K avg	38		
375.36	2K avg	50		
375.36	100 avg	50		
375.51	1k avg	50		
375.2	1K avg	50		
384.7	100 avg	38		
388.2	100 avg	38		
391.9	100 avg	38		
395.9	100 avg			
416.0	10K avg	60		
420.09	1K avg	56		
449.0	1K avg	56		
461.6	180 avg	30		
463.0	180 avg	30		
468.0	180 avg	30		
469.0	180 avg	30		
1016.0	5K avg	38		
1150.0	500 avg	50		
1730.5	10K avg	50		
1780.5	10K avg	50		
1819.5	10K avg	56		
2788.0	85K avg	38		
2850.0	250K pk	60	40	1.2
3850.0	250K pk	50	40	1.2
2920.0	2K pk	50		
5480.0	250K pk	50		
7526.5	500 avg	50		
7601.5	500 avg	50		
8012.5	500 avg	50		

APPENDIX D (Cont'd)

FREQUENCY (mc)	POWER (Watts)	DISTANCE (x1000 ft) from PALC-2	ANTENNA GAIN(db)	HALF-POWER BEAM WIDTH (degrees)
8087.5	500 avg	50		
8462.5	500 avg	50		
8500 - 9600	25K pk	50		
8620.0	200K avg	50		
8690.0	25K avg	50		
8710.0	2K avg	50		
8770.0	25K avg	50		
8850.0	50K avg	50		
8935.0	75K avg	50		
9075.0	25K avg	50		
9100.0	200K avg	50		
9170.0	3K avg	50		
9190.0	2Kavg	50		
9330.0	3K avg	50		
9490.0	3K avg	50		
9570.0	3K avg	50		
9460.0	200K avg	50		
9550.0	2K avg	50		
400.38	1K avg	50		
225-400	100 avg	18	10	1.5
416.0	10K avg	18	8	5
8500-9600	250K pk	18	39	1.5
3100-3500	1000K pk	18	29	1.5
5400-5900	1000K pk	24	44	1.2
1280-1350	5000 pk	20	35	1.5
2700-2900	5000K pk	20	38	1.2
2880	500K avg	20	35	1.5
100	1250 avg	20	10	
2700-2900	500K avg	24	28	
9000-9160	50K avg	14	39	2
2670-3930	500K pk	20	33	
7500-8500	60K avg	20	40	1.5

Note: Avg. = Average; pk = Peak; K = 1000

Possible External EMI Sources

Orbit	Recovery
BMEWS Radar	U.S. Navy Radar & Communications
Dew Line Radar	U.S.S.R. Fishing Boat Radar & Communications
USSR Radar	

Possible Internal Electromagnetic Interference Sources

Launch & Powered Flight

	FREQ. (mc)	POWER (watts)
VHF Telemetry	248.6	8 avg
VHF Telemetry	258.5	8 avg
UHF Beacon	400.	
Verlort Beacon	2920	1 K pk
*Recovery Beacon	235	7.5 pk
*Recovery Telemetry	228.2	2 avg
* (Pre-launch test only)		
Agena Telemetry	231.4	8 avg
Atlas Beacon	2300.0	5 avg
Atlas Telemetry	249.9	25 avg

Recovery

Beacon	235	7.5 pk
Telemetry	228.2	2 avg.

SECTION 5

APPENDIX E

RE-ENTRY DENSITY DATA

References:

1. Cole, Allen E., "Density Variability Up to 300,000 Feet", Geophysics Research Directorate, Air Force Cambridge Research Laboratories.

2. Quiroz, Roderick S., "Air Density Profiles for the Atmosphere Between 30 and 80 Kilometers," Air Weather Service, USAF.

3. Smith, Orvel E., and Halsey, Chenoweth B., "Range of Density Variability from Surface to 120 Km Altitude", Technical Note D-612, NASA.

4. Standard Atmosphere Revision to 90 Km (U.S. Standard Atmosphere 1962)

Table E-1 Winter Mean Density at 30°N Latitude

Altitude Km	Altitude Ft.	Mean Density (ρ) slugs/ft^3
0.000	0.000	2.400×10^{-3}
4.003	13,133	1.574
6.006	19,705	1.280
8.010	26,279	1.029
10.016	32,861	8.090×10^{-4}
14.031	46,033	4.707
20.063	65,823	1.776
24.091	79,039	8.977×10^{-5}
30.142	98,891	3.355
34.183	112,149	1.790
40.253	132,063	7.245×10^{-6}
44.307	145,364	4.116
50.396	165,341	1.859
54.463	178,684	1.125
60.572	198,727	5.309×10^{-7}
64.651	212,109	3.240
70.779	232,214	1.467
74.872	245,643	8.229×10^{-8}
79.994	262,447	3.844
83.072	272,545	2.223
87.179	286,020	1.095
90.000	295,275	6.704×10^{-9}

Table E-2 Summer Mean Density at 30°N Latitude

0.000	0.000	2.258×10^{-3}
4.003	13,133	1.542
6.006	19,705	1.254
8.010	26,279	1.019
10.016	32,861	8.170×10^{-4}
14.031	46,033	5.015
20.063	65,823	1.862
24.091	79,039	9.516×10^{-5}
30.142	98,891	3.634
34.183	112,149	1.956
40.253	132,063	8.070×10^{-6}
44.307	145,364	4.578
50.396	165,341	2.067
54.463	178,684	1.276
60.572	198,727	6.139×10^{-7}

Table E-2 Summer Mean Density at 30°N Latitude
(Cont'd)

Altitude Km	Altitude Ft.	Mean Density (ρ) slugs/ft^3
64.651	212,109	3.679
70.779	232,214	1.620
74.872	245,643	8.829×10^{-8}
79.994	262,447	3.921
85.125	279,281	1.523
90.000	295,275	6.212×10^{-9}

SECTION 6

PAYLOAD DATA REDUCTION
(Formerly GE SVS 5500, EK 801-119)

6.1 SCOPE

This document defines the post-flight data reduction interface which exists between the General Electric Co. (GE) and Eastman Kodak Co., (EK) on Program 206 for SV's 968 and subsequent.

6.2 APPLICABLE DOCUMENTS

The following GE-EK Interface Documents are applicable:

Table 2 of this specification (SVS 105Z/502-146)

6.3 NOMENCLATURE

6.3.1 WAVE TRAIN

Wave train refers to the pulse amplitude modulated output of a multiplexer used to sequentially sample the output of telemetry sensors.

6.3.2 RECORD

Record as used in this document refers to a pictorial presentation of the analog telemetry data on a permanent oscillograph chart.

6.3.3 DECOMMUTATED DATA

As used in this document, decommutated data refers to the automatic separation of individual data pulses from the commutated wave train and presenting them sequentially as individual time histories.

6.3.4 TRACES

The term traces refers to the marks generated on the oscillograph paper representing the changes in output voltage of the monitored functions.

6.3.5 SYSTEM TIME

System time is Greenwich Mean Time (GMT) expressed in seconds after midnight and given to 0.1 second.

6.3.6 REAL TIME STATION CONTACT

A real time station contact connotes time period of telemetry data transmitted in real time from an S/V and recorded on magnetic tape by a tracking station from signal acquisition to fade, for any one orbital pass over that station.

6.3.7 PLAYBACK RECORDER OPERATION

A playback recorder operation connotes a time period of telemetry data recorded on the S/V airborne recorder during a payload operation and transmitted from the S/V and recorded by a tracking station on magnetic tape during a real time station contact.

6.4 REQUIREMENTS

6.4.1 GENERAL

Telemetry data for the C/P Instrumentation points listed on Table 2 shall be reduced by GE for EK use. For each flight test, EK will request data from GE for specific real time station contacts and playback recorder operations. Average quantities of data listed below for each flight represent GE/AF agreements in support of EK.

Format	Stn. Contacts	Content
F1, 2	10	Real time (RT) from channels 12 and 14 analog
F3	5	RT channel 12 and 14 analog
F4	5	RT wave trains from channels 12, 10 and 14 analog
Bands 10, 12 & 14	15	RT Digital Temp. Data from channels 10, 12 and 14
F11, 12	10	Playback (PB) from channels 12 and 14 analog
F13	5	PB channel 12 and 14 analog
F14	5	PB wave trains from channels 10, 12 and 14 analog
Bands 10, 12 & 14	15	PB Digital Temp. Data from Channels 10, 12 and 14

The data shall be reduced by GE-SMSP, King of Prussia, Pa., for use by EK at Rochester, New York, for flight analysis.

6.4.2 DATA RECORD FORMAT

The data provided to EK shall have the following formats.

6.4.2.1 Analog Data

6.4.2.1.1 Continuous Channel - EK has no continuous channel data reduction requirements.

6.4.2.1.2 Wave Train Data - Wave trains of the three subcarrier oscillators containing EK data shall be supplied as follows. These will be identified as Record F4 (Real Time) or Record F14 (Playback).

6.4.2.1.2.1 No. of Traces - 3 subcarrier wave trains plus a time code.

6.4.2.1.2.2 Type of Record - Output of Midwestern Instrument Co. System Model No. 591 or equivalent. The record shall be in rolls of 475 feet or less with an internal diameter of approximately 5/8 inch and an axial length of 12 inches.

6.4.2.1.2.3 Record Speed - 6.5 inches per second.

6.4.2.1.2.4 Presentation - Single record containing three data traces and the time trace, full scale peak to peak deflection of the data traces shall be 2.00 inches, plus or minus 0.25 inches. The time trace shall consist of pulses with amplitude of from 0.5 to 0.75 inch peak to peak. The amplitude of the trace with no pulses (unmodulated) shall not exceed 0.25 inch. Traces shall not overlap.

6.4.2.1.2.5 Number of Copies - Original only

6.4.2.1.3 Decommutated data as listed in Paragraph 6.4.2.1.3.4 will be furnished as follows:

6.4.2.1.3.1 No. of Traces - A total of 18 data functions will be presented with a time code of three (3) record formats described in table of Item 4 below. Record Numbers F1, F2, F3 are real time data records; record numbers F11, F12, F13 are playback data records.

(F-8) 6.4.2.1.3.2 Type of Record - Output of Brush Instrument Co. Model MK-200 or equivalent. The record shall be Brush Instrument Co., Part No. 11-2983-90 8 channel roll or equivalent.

6.4.2.1.3.3 Record Speed
(F-8)

Record Number	Record Speed
F1 + F11	5mm/sec
F2 + F12	10 mm/sec
F3 + F13	10 mm/sec

Decommutated records F1 and F11 shall have a burst at a speed of 20mm per second for a period of 4 seconds to permit the recording of the time code at a speed which will permit greater ease and accuracy in reading. Records F2, F3, F12 and F13 shall be run at 50mm per second for a 4 second period for the same reason.

6.4.2.1.3.4 Record Formats

Trace No.	F1	F2	F3	F11	F12	F13	F1A*	F1B*	F11A*	F11B*
1	25	12	28	25	12	S	25	25	25	25
2	33	18	VM	33	18	VM	24	30	24	30
3	34	17	23	34	17	23	32	31	32	31
4	35	15	22	35	15	22	1	S	1	S
5	29	16	21	29	16	21	29	29	29	29
6	3	14	20	3	14	20	3	3	3	3
7	19	13	27	19	13	27	11	11	11	11
8	Time	Time	Time	Time	Time	Time	Time	Time	Time	Time

Numbers refer to CPL designations, e.g. 19 refers to CPL 19. Letters refer to the following designations:

VM - Voltage Monitor
S - Spare, i.e. blank trace

*Alternate formats for F1 and F11

6.4.2.1.3.5 No. of Copies - Original only

6.4.2.1.3.6 Percent-full-scale calibration information for each trace shall be provided.

6.4.2.2 Digital Data

Data from Functions CPL 2, 4 through 11, 26 will be processed as shown below.

6.4.2.2.1 Number of Computations - CPL Data

6.4.2.2.1.1 Band 10 - Data for all CPL's on Band 10 will be converted to percent full scale of the instrumentation calibration voltage and each sample will be listed with its corresponding time. A mean and standard deviation shall be computed for each function for each real time telemetry read-out and for each function for each airborne recorder operation.

6.4.2.2.1.2 Bands 12 and 14 - Data for all CPL's on Bands 12 and 14 will be converted to percent full scale of the instrumentation calibration voltage and a mean and standard deviation for each function for each ten-second interval will be listed with its corresponding time. Also, a mean and standard deviation shall be computed for each function for each real time telemetry readout and for each function for each airborne recorder operation.

6.4.2.2.2 A time label shall be provided for each tabulation.

6.4.2.2.3 Number of copies - Original only

6.4.3 DATA RECORD ACCURACY

The data shall not be degraded by the data reduction process by more than ±1.2% RSS of full scale for digital data and ±1.4% RSS of full scale for analog data.

6.4.4 DATA RECORD TIME INFORMATION

Time information shall be applied to all reduced telemetry as described below. GE will provide EK with the information needed to read the time codes used.

6.4.4.1 Analog Data - Time Trace

6.4.4.1.1 Real Time Telemetry - Each record containing wave trains or decommutated data traces shall contain a time code trace.

6.4.4.1.2 Playback telemetry - Each record containing wave trains or decommutated data traces shall contain a time code trace.

6.4.4.2 Digital Data - Time Labels

6.4.4.2.1 Real Time Telemetry - Each Computer tabulation shall include a print out of start time and number of samples used in the computation.

6.4.4.2.2 Playback Telemetry - Each computer tabulation shall include a printout of start time and number of samples used in a computation.

6.4.5 RECORD AND TABULATION ANNOTATION

6.4.5.1 Each analog record and computer tabulation shall carry at least the following annotations.

6.4.5.1.1 Telemetry station name.

6.4.5.1.2 Revolution number of recording at telemetry station in (1) above.

6.4.5.1.3 Test number

6.4.5.1.4 Number of the revolution during which the data was recorded on the airborne recorder.

6.4.5.1.5 Subcarrier Oscillator Frequency

6.4.5.1.6 Pulse number

6.4.5.1.7 TLM Transmission Mode - Real Time or Playback

6.4.5.1.8 Reduction date

6.4.5.1.9 Time Annotation

6.4.5.1.9.1 Analog Real Time Telemetry - Analog records resulting from real time telemetry shall contain at least one system time value corresponding to the time the data was recorded at the tracking station.

6.4.5.1.9.2 Analog Playback Telemetry - Analog records resulting from each airborne recorder operation shall contain at least one system time value corresponding to the time the data was recorded on the airborne recorder.

6.4.5.1.9.3 Digital Data Real Time Telemetry - Digital data resulting from real time telemetry shall contain the system time value corresponding to the time the first sample was recorded at the tracking station.

6.4.5.1.9.4 Digital Data Playback Telemetry - Digital data resulting from each airborne recorder operation shall contain the system time value corresponding to the time the first sample was recorded on the airborne recorder.

6.4.5.2 GE will deliver to EK the most recent version of the Command Definition Specification at least 5 days prior to the flight date.

6.4.5.3 GE will deliver to EK the SV Calibration Book at the time of publication and subsequent amendment at approximately (5) days prior to the flight date.

6.4.5.4 EK will deliver to GE the Camera Payload Calibration curves at the time of publication and the subsequent amendments at approximately (5) days prior to the flight date.

6.4.6 AVAILABILITY OF DATA

Data shall be available to EK on as prepared basis at GE-SMSP, King of Prussia.

6.4.7 DATA REDUCTION PRIORITY

The priority to be used in the reduction of data will be determined by GE and EK respresentatives: (1) Upon preliminary estimates of vehicle health based on A and B priority telemetry readouts during the flight and (2) upon completinn of preliminary analysis work based on (1) after the flight. As soon as possible after the generation of the priority lists, they will be compared by phone or in a predetermined area at STA by designated EK and GE personnel. A final priority list incorporating both GE and EK priorities will be drafted on each occasion. Each final priority list will take precedence over the one(s) before it. Copies of these lists will be transmitted to designated EK and GE individuals at GE-SMSP. Any further conflicts will be resolved at GE-SMSP by these two individuals. In the event of serious conflict at the STA regarding data reduction priorities where no decision can be agreed to by both parties after negotiation, an alternation of priorities method will be invoked to resolve the conflict. An alternation of priorities method is defined as follows: for the first conflict, EK's data unit will be reduced before GE's data unit is reduced, and for the second conflict, GE's data unit will be reduced before EK's data unit is reduced. A data unit is defined to be all the telemetry for a given revolution. This method will continue to be used until all conflicts are resolved. A letter or TWX stating (1) data reduction tape priorities and (2) enumerating all records and printouts which EK expects to receive from a flight will be send to GE from the EK home office within (5) calendar days after the end of active operations.

6.5 SECURITY

6.5.1 DATA HANDLING

6.5.1.1 Magnetic Tapes

The magnetic tapes contain telemetry information which is unintelligible without reduction and the use of a Camera Payload Calibration Book. It is planned to handle the magnetic tapes as unclassified need-to-know.

6.5.1.2 Data Records

The data records will contain payload sensor information which is presented in percent of full scale. This data is unintelligible without the use of the Camera Payload Calibration Book. It is planned to handle the data records as unclassified need-to-know during the process of reduction and processing at GE. When the records are annotated with system time and stored at GE, they will be treated as "Secret-Special Handling" and will be stamped "Secret-Special Handling, Rough Draft".

6.5.1.3 Data Shipment

The data records will be treated as "Secret-Special Handling" when they are packaged and addressed to the Eastman Kodak Company.

6.5.2 DATA REDUCTION PERSONNEL

The Camera Payload Calibration Book will not be available to the personnel involved in the reduction and storage of the payload data prior to annotation. These people will not require a clearance for Program "G".

6.6 CHANGE CONTROL

This specification constitutes an agreement between GE-SMSP and EK payload data reduction requirements for post flight evaluation. Any deletions or additions to this specification shall become official only after signed agreement in accordance with Appendix I of this specification.

SECTION 7

7. COMMAND CODES

The Command Code interfaces between GE and EK are defined in this Section and the adjacent tables.

7.1 FILM SPEED COMMAND CODE

The film speed command codes are defined in Table 9

7.2 PROGRAMMABLE SLIT COMMAND CODE

The programmable slit command codes are defined in Table 10

7.3 SERVO POSITION CODES

The servo position codes are defined in Table 11

TABLE 9 - FILM SPEED COMMAND CODES, CP
(Formerly GE Dwg. 73D004; EK Dwg. 801-108)

STEP NO	CAMERA FILM SPEED IN INCHES/SEC	CB 1	CB2	CB3	CB 4	CB 5	CB 6
1	2.484	0	1	1	0	1	0
2	2.509	0	1	1	1	0	1
3	2.534	0	1	1	1	1	0
4	2.559	0	1	1	0	0	1
5	2.585	0	1	1	1	0	0
6	2.611	0	1	1	0	1	1
7	2.637	0	1	1	0	0	0
8	2.663	0	1	1	1	1	1
9	2.690	1	0	0	0	1	0
10	2.717	1	0	0	1	0	1
11	2.744	1	0	0	1	1	0
12	2.772	1	0	0	0	0	1
13	2.799	1	0	0	1	0	0
14	2.827	1	0	0	0	1	1
15	2.855	1	0	0	0	0	0
16	2.884	1	0	0	1	1	1
17	2.913	0	1	0	0	1	0
18	2.942	0	1	0	1	0	1
19	2.971	0	1	0	1	1	0
20	3.001	0	1	0	0	0	1
21	3.031	0	1	0	1	0	0
22	3.061	0	1	0	0	1	1
23	3.092	0	1	0	0	0	0
24	3.123	0	1	0	1	1	1
25	3.154	1	0	1	0	1	0
26	3.186	1	0	1	1	0	1
27	3.218	1	0	1	1	1	0
28	3.250	1	0	1	0	0	1
29	3.282	1	0	1	1	0	0
30	3.315	1	0	1	0	1	1
31	3.348	1	0	1	0	0	0
32	3.382	1	0	1	1	1	1
33	3.416	0	0	0	0	1	0
34	3.450	0	0	0	1	0	1
35	3.484	0	0	0	1	1	0
36	3.519	0	0	0	0	0	1
37	3.554	0	0	0	1	0	0
38	3.590	0	0	0	0	1	1

TABLE 9 - FILM SPEED COMMAND CODES, CP
(Cont'd)

STEP NO	CAMERA FILM SPEED IN INCHES/SEC	CB 1	CB 2	CB 3	CB 4	CB 5	CB 6
39	3.626	0	0	0	0	0	0
40	3.662	0	0	0	1	1	1
41	3.699	1	1	1	0	1	0
42	3.735	1	1	1	1	0	1
43	3.773	1	1	1	1	1	0
44	3.811	1	1	1	0	0	1
45	3.849	1	1	1	1	0	0
46	3.887	1	1	1	0	1	1
47	3.926	1	1	1	0	0	0
48	3.965	1	1	1	1	1	1
49	4.005	0	0	1	0	1	0
50	4.045	0	0	1	1	0	1
51	4.086	0	0	1	1	1	0
52	4.126	0	0	1	0	0	1
53	4.163	0	0	1	1	0	0
54	4.209	0	0	1	0	1	1
55	4.251	0	0	1	0	0	0
56	4.294	0	0	1	1	1	1
57	4.337	1	1	0	0	1	0
58	4.380	1	1	0	1	0	1
59	4.424	1	1	0	1	1	0
60	4.468	1	1	0	0	0	1
61	4.513	1	1	0	1	0	0
62	4.558	1	1	0	0	1	1
63	4.604	1	1	0	0	0	0
64	4.650	1	1	0	1	1	1

TABLE 10 - PROGRAMMABLE SLIT COMMAND CODE
(Formerly GE Dwg. 72C010; EK Dwg. 801-121)

(F-2)

CB 20	CB 21	SLIT POSITION
0	0	A
0	1	B
1	0	C
1	1	D

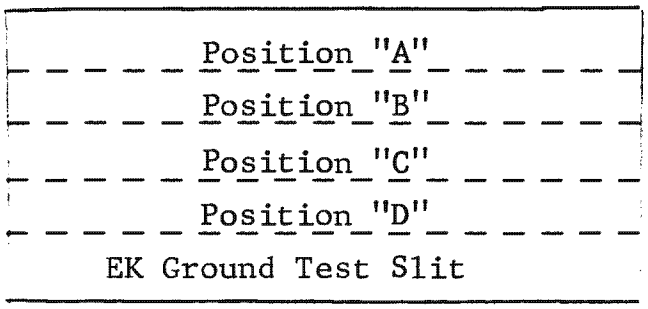

Direction of film motion looking down from + Z direction

TABLE 11 - SERVO POSITION CODES
(Formerly GE Dwg. 72C002; EK Dwg. 601-107)

CRABBING SERVO
BINARY CODE

CB 10	CB 11	CB 12	LOAD ANGLE IN DEGREES
0	0	0	0
0	0	1	0.5
0	1	0	1.0
0	1	1	1.5
1	0	0	2.0
1	0	1	2.5
1	1	0	3.0
1	1	1	3.5

STEREO SERVO - BINARY CODE

CB 8	CB 9	LOAD ANGLE IN DEGREES
0	0	-7.5 Note 1
0	1	0
1	0	Note 2
1	1	+7.5

NOTES:

1. The negative angle corresponds to a rearward looking stereo position.

2. This combination is not a valid command.

APPENDIX #1

(Procedure for Revision of Interface Drawings and Specifications)

1. The procedure to be used for revising the GE-EK Interface Documents listed in paragraph 2.3 is herewith defined.

2. Documents prepared by EK - (None apply as of the date of this document).

   2.1 EK will prepare, upon receipt of a letter from GE, approved by the proper GE validating representatives, or when desired by EK, two identical master copies of a Design Change Order (hereafter called a DCO) and process them within EK, incorporating the necessary EK validating signatures. An approval block for GE will be provided. Both master copies of the DCO will be forwarded to GE for their review and approval. If the revision is agreed to by GE both master copies will be signed by the appropriate GE representatives.

   2.2 The DCO becomes an official change to the interface agreement when signed by both EK and GE. One completely validated DCO master will be retained by GE for their reproduction and distribution. The other DCO master will be returned to EK for their internal use.

   2.3 Until such time as both EK and GE have signed the DCO masters, no agreement has been made and no changes will be entered on masters of the basic drawings or specifications.

   2.4 Drawings and specifications will be reissued on a quarterly basis, or when 5 DCO's are outstanding.

3. Documents prepared by GE (Ref. Para. 2.3)

   3.1 GE will prepare, upon receipt of a letter from EK approved by the proper EK validating representatives, or when desired by GE, two identical master copies of an Alteration Notice (hereafter called an AN) and process them within GE, incorporating the necessary GE validating signatures. An approval block for EK will be provided. Both Master copies of an AN will be forwarded to EK for their review and approval. If the revision is agreed to by EK both Master copies will be signed by the appropriate EK representatives.

3.2 The AN becomes an official change to the interface agreement when signed by both EK and GE. One completely validated AN master will be retained by EK for their reproduction and distribution. The other AN master will be returned to GE for their internal use.

3.3 Until such time as both EK and GE have signed an AN master, no agreement has been made and no changes will be entered on masters of the basic drawings and specifications.

3.4 Drawings and specifications will be reissued yearly or at other times mutually agreed upon by GE and EK.

4. Major Hardware Changes

4.1 When GE and EK agree that vehicle hardware changes require major changes to the GE-EK interface documentation, dash drawings will be created to define the new requirements. This procedure will allow early documentation of new requirements while maintaining a record of current and past requirements.

4.2 The new drawings will initially be identical to the corresponding, current, interface drawing, including any changes outstanding against the drawing. They will have a note listing SVS 105Z/502-146 as authority for creating and telling the revision level and DCO's/AN's of the current interface drawing used to create the new "dash drawing". Since the original documents will have been approved by GE, EK, AF, and AS representatives, approvals of the new drawings will not be required. The new interface drawings, once created, will exist as separate independent documents.

4.3 The new requirements will be documented by preparing AN's and DCO's against the drawings created in accordance with paragraph 4.2 above. These DCO's and AN's will require approval in accordance with the procedures established in paragraphs 2 and 3 above.

4.4 Each time a new drawing is created a new "dash number" will replace the "dash number" currently assigned to the drawing. The "dash number" will be increased by one each time a major change, with an independent effectivity, is created.

5. Field Operating Procedures

5.1 Existing field procedures used by GE and EK will not be changed without the consent of both parties.

APPENDIX #2

CODE NAMES OF CAMERA PAYLOAD SIGNALS

1. In conformance with the covert nature of the relationship which exists between the Eastman Kodak Company and the General Electric Company, the using in "White" Documents of "Black" Signal codes is prohibited.

   Specifically, these "black" Signal Codes are those which have been originated by EK and they are:

   a. "CB---"; (Command)
   b. "CPL---"; (Instrumentation -- Telemetry)
   c. "BBT---"; (Instrumentation -- Umbilical)
   d. "VP---"; (Instrumentation -- Test Point)
   e. "VTP---"; (Instrumentation -- Test Point)

2. The "white" Signal Codes equivalent to these "black" Signal Codes are tabulated herewith: (NOTE: There is no "white" equivalent for "black" Signal Functions.)

Type of Signal	"Black" Signal Code	"White" Signal Code	Signal Function - "Black"
Command	CB1a	GFE 1-C1a	Film Speed Bit No. 1 ON
	CB1b	GFE 1-C1b	No. 1 OFF
	CB2a	GFE 1-C2a	No. 2 ON
	CB2b	GFE 1-C2b	No. 2 OFF
	CB3a	GFE 1-C3a	No. 3 ON
	CB3b	GFE 1-C3b	No. 3 OFF
	CB4a	GFE 1-C4a	No. 4 ON
	CB4b	GFE 1-C4b	No. 4 OFF
	CB5a	GFE 1-C5a	No. 5 ON
	CB5b	GFE 1-C5b	No. 5 OFF
	CB6a	GFE 1-C6a	Film Speed Bit No. 6 ON
	CB6b	GFE 1-C6b	Film Speed Bit No. 6 OFF
	CB7a	**GFE 1-C7a	Camera Drive ON
	CB7b	**GFE 1-C7b	Camera Drive OFF
	CB8a	GFE 1-C8a	Stereo, Most Significant Bit, NO
	CB8b	GFE 1-C8b	Stereo, Most Significant Bit, NC
	CB9a	GFE 1-C9a	Stereo, Least Significant Bit, NO
	CB9b	GFE 1-C9b	Stereo, Lease Significant Bit, NC

Type of Signal	"Black" Signal Code	"White" Signal Code	Signal Function - (Black)
Command	CB10a	GFE 1-C10a	Crabbing, Most Significant Bit, NO
	CB10b	GFE 1-C10b	Crabbing, Most Significant Bit, NC
	CB11a	GFE 1-C11a	Crabbing, 2nd Most Signi. Bit, NO
	CB11b	GFE 1-C11b	Crabbing, 2nd Most Signi. Bit, NC
	CB12a	GFE 1-C12a	Crabbing, Least Significant Bit, NO
	CB12b	GFE 1-C12b	Crabbing, Least Significant Bit, NC
	CB13	----------	N O T U S E D
	CB14	----------	N O T U S E D
	CB15a	GFE 1-C15a	Focus Control Power
	CB16	GFE 1-C16	Focus Control Mode
	CB17	GFE-1-C17	Focus Forward Drive
	CB18	GFE 1-C18	Focus Reverse Drive
	CB19	----------	N O T U S E D
	CB20a	GFE 1-C20a	Slit, Most Significant, Bit, NO
	CB20b	GFE 1-C20b	Slit, Most Significant, Bit, NC
	CB21a	GFE 1-C21a	Slit, Least Significant, Bit, NO
	CB21b	GFE 1-21b	Slit, Least Significant Bit, NC
	CB22	----------	N O T U S E D
	CB23	----------	N O T U S E D
	CB24a	GFE 2-C24a	Supply Spool Torque Motor
	No Equivalent	GFE 1-C25a	EK Operational Power
	No Equivalent	GFE 1-C26a	EK Environmental Power (OCV)
Telemetry	CPL 1	GFE 1-1	CB 12 Monitor
	CPL 2	GFE 2-2	Forward Record Storage Temp.
	CPL 3	GFE 1-3	Stereo Mirror Differential Temp.
	CPL 4	GFE 1-4	Stereo Mirror Temp.
	CPL 5	GFE 1-5	Lens Barrel Aft End Temp.
	CPL 6	GFE 1-6	45° Mirror Temp.
	CPL 7	GFE 1-7	Comp. Support Tube-Y Sta 149 Temp.

Type of Signal	"Black" Signal Code	"White" Signal Code	Signal Function - "Black"
Telemetry	CPL 8	GFE 1-8	Comp. Support Tube-Y Sta 179 Temp
	CPL 9	GFE 1-9	Comp. Support Tube-Y Sta 198 Temp
	CPL 10	GFE 1-10	Reference Voltage
	CPL 11	GFE 1-11	Comp. Support Tube-Z Sta 179 Temp
	CPL 12	GFE 1-12	Slit Position
	CPL 13	GFE 1-13	Stereo Position
	CPL 14	GFE 1-14	Crab Position
	CPL 15	GFE 2-15	Film Take-Up Quantity, Coarse No.1/Reel Rotation
	CPL 16	GFE 1-16	Film Take-Up Quantity, Fine
	CPL 17	GFE 1-17	Looper Position/Film Tension
	CPL 18	GFE 1-18	Film Drive Electronics Output
	CPL 19	GFE 1-19	Amplified Data Signals
	CPL 20	GFE 1-20	Platen Position (Coarse)
	CPL 21	GFE 1-21	Focus Output
	CPL 22	GFE 1-22	Focus Forward Channel Output
	CPL 23	GFE 1-23	Focus Reverse Channel Output
	CPL 24	GFE 1-24	CB 10 Monitor
	CPL 25	GFE 1-25	Port Open Tell-Tale
	CPL 26	GFE 1-26	Environmental Power Supply-OCV
	CPL 27	GFE 1-27	Platen Position (Fine)
	CPL 28	GFE 1-28	Film Take-Up Quantity, Coarse No. 2
	CPL 29	GFE 1-29	Take-Up Motor Current
	CPL 30	GFE 1-30	CB 8 Monitor
	CPL 31	GFE 1-31	CB 9 Monitor
	CPL 32	GFE 1-32	CB 11 Monitor
	CPL 33	GFE 1-33	Stereo Servo Control Cir.
	CPL 34	GFE 1-34	Crab Servo Control Cir.
	CPL 35	GFE 1-35	28 Volt Supply

Type of Signal	"Black" Signal Code	"White" Signal Code	Signal Function - "Black"
Telemetry (F-4)	CPL 36	GFE1-36	Stereo Mirror Temp. Sensor
"	CPL 37	GFE 1-37	Stereo Mirror Temp. Sensor
"	CPL 38	GFE 1-38	Stereo Mirror Temp. Sensor
"	CPL 39	GFE 1-39	Stereo Mirror Temp. Sensor
"	CPL 40	GFE 1-40	Stereo Mirror Temp. Sensor
"	CPL 41	GFE 1-41	Stereo Mirror Temp. Sensor
"	CPL 42	GFE 1-42	Stereo Mirror Temp. Sensor
"	CPL 43	GFE 1-43	Stereo Mirror Temp. Sensor
"	CPL 44	GFE 1-44	Stereo Mirror Temp. Sensor
	------	+22VDC Cal	Instru. Cal. Voltage

Type of Signal	"Black" Signal Code	"White" Signal Code	Signal Function "Black"
Umbilical	BBT 1	UMB-1	Looper Position Umbilical Instr.
	BBT 2	UMB-2	Drive Freq, Umbilical Instr.
	BBT 3	UMB-3	Stereo Mirror Umbilical Temp
	BBT 4	UMB-4	Tube Sta. 177 Umbilical Temp
	BBT 5	UMB-5	Torque Motor Command Umb. Instr.
	BBT 6	UMB-6	Master Umbilical Tell Tale
	BBT 7	UMB-7	Spare Umbil. Inst.
	BBT 8	UMB-8	Return
Test Plug	VTP 1	TP4-1	CB 12 Monitor
	VTP 2	TP4-2	Forward Record Storage Temp.
	VTP3	TP4-3	Stereo Mirror Differ. Temp.
	VTP 4	TP4-4	Stereo Mirror Temp.
	VTP 5	TP4-5	Lens Barrel Aft End Temp.
	VTP 6	TP4-6	45° Mirror Temperature
	VTP 7	TP4-7	Comp. Support Tube-Y Sta 149 Temp.
	VTP 8	TP4-8	Comp. Support Tube-Y Sta 179 Temp.
	VTP 9	TP4-9	Comp. Support Tube-Y Sta 198 Temp.
	VTP 10	TP4-10	Reference Voltage
	VTP 11	TP4-11	Comp. Support Tube-Z Sta 179 Temp.
	VTP 12	TP4-12	Slit Position
	VTP 13	TP4-13	Stereo Position
	VTP 14	TP4-14	Crab Position
	VTP 15	TP4-15	Film Take-Up Quantity Coarse No.1/Reel Pos.
	VTP 16	TP4-16	*Film Take-Up Quantity, Fine
	VTP 17	TP4-17	Looper Position/Film Tension
	VTP 18	TP4-18	Film Drive Electronics Output

Type of Signal	"Black" Signal Code	"White" Signal Code	Signal Function - "Black"
Test Plug	VTP 19	TP4-19	Amplified Data Signals
	VTP 20	TP4-20	Platen Position (Coarse)
	VTP 24	TP4-24	CB 10 Monitor
	VTP 25	TP4-25	*Port Open Tell Tale
	VTP 28	TP4-28	*Film Take-Up Quantity, Coarse No. 2
	VTP 29	TP4-29	*Take-Up Motor Current
	VTP 30	TP4-30	CB 8 Monitor
	VTP 31	TP4-31	CB 9 Monitor
	VTP 32	TP4-32	CB 11 Monitor
	VTP 33	TP4-33	Stereo Servo Control Cir.
	VTP 34	TP4-34	Crab Servo Control Cir.
	VTP 35	TP4-35	28 Volt Supply
	VP 1	TP3-1	Focus Forward Channel Output
	VP 2	TP3-2	Slit, Most Signif. Bit, NO
	VP 3	TP3-3	Slit, Most Signif. Bit, NC
	VP 4	TP3-4	Slit, Least Signif. Bit, NO
	VP 5	TP3-5	Focus Output
	VP 6	TP3-6	Stereo, Most Signif. Bit, NO
	VP 7	TP3-7	Stereo, Most Signif. Bit, NC
	VP 8	TP3-8	Stereo, Most Signif. Bit, Common
	VP 9	TP3-9	Stereo, Least Signif. Bit, NO
	VP 10	TP3-10	Stereo, Least Signif. Bit, NC
	VP 11	TP3-11	Stereo, Least Signif, Bit, Common
	VP 12	TP3-12	Focus Reverse Channel Output
	VP 13	TP3-13	+5 Volts DC Supply
	VP 14	TP3-14	Auto. Focus Lead A
	VP 15	TP3-15	Auto. Focus Lead B
	VP 16	TP3-16	Focus Motor Lead A
	VP 17	TP3-17	Focus Motor Lead B
	VP 18	TP3-18	Crabbing, Most Signif, Bit NO

Type of Signal	"Black" Signal Code	"White" Signal Code	Signal Function - "Black"
Test Plug	VP 19	TP3-19	Crabbing, Most Signif. Bit NC
	VP 20	TP3-20	Crabbing, Most Signif. Bit, Common
	VP 21	TP3-21	Crabbing, 2nd Most Signif. Bit NO
	VP 22	TP3-22	Crabbing, 2nd Most Signif. Bit NC
	VP 23	TP3-23	Crabbing 2nd Most Signif. Bit, Common
	VP 24	TP 3-24	Crabbing, Lease Signif. Bit NO
	VP 25	TP3-25	Crabbing, Lease Signif. Bit NC
	VP 26	TP3-26	Crabbing, Least Signif. Bit Common
	VP 27	TP3-27	Film Speed Bit No.1 ON
	VP 28	TP3-28	Film Speed Bit No.1 OFF
	VP 29	TP3-29	Film Speed Bit No.2 ON
	VP 30	TP3-30	Film Speed Bit No.2 OFF
	VP 31	TP3-31	Film Speed Bit No.3 ON
	VP 32	TP3-32	Film Speed Bit No.3 OFF
	VP 33	TP3-33	Film Speed Bit No.4 ON
	VP 34	TP3-34	Film Speed Bit No.4 OFF
	VP 35	TP3-35	Film Speed Bit No.5 ON
	VP 36	TP3-36	Film Speed Bit No.5 OFF
	VP 37	TP3-37	Film Speed Bit No.6 ON
	VP 38	TP3-38	Film Speed Bit No.6 OFF
	VP 39	TP3-39	Camera Drive ON
	VP 40	TP3-40	Camera Drive OFF
	VP 41	TP3-41	Common for CB1 thru CB7
	VP 42	TP3-42	For EK Use Only
	VP 43	TP3-43	For EK Use Only
	VP 44	TP3-44	-22 Volts DC Supply
	VP 45	TP3-45	+22 Volts DC Supply
	VP 46	TP3-46	+28 Volts DC Supply
	VP 47	TP3-47	DC Return
	VP 48	TP3-48	Slit, Least Signif. Bit NC
	VP 49	TP3-49	Focus Control Power Comm.
	VP 50	TP3-50	Environmental Supply
	VP 51	TP3-51	Platen Position (Fine)

*Note: Commands #GFE 1C7a and #GFE 1C7b are commands which are implicit in the GE Command Subsystem. These two (2) commands cannot be given directly.

APPENDIX 3

GE-EK ACTIVITY INTERFACE DEFINITIONS

(The information contained herein was excerpted from Specification SVS 4503/802-178 "EK-GE Interface (Responsibilities and Support Equipment)". All other portions of SVS 4503/802-178 are contained elsewhere in SVS 105Z/502-146 and are not duplicated in this Appendix).

1. Interface - An interface is the physical, or abstract boundary between contractor subsystems; such an interface defines the areas of mutual responsibility, interest, or limitations of concern to the associate contractors involved.

2. Test Conductor - The test conductor concept applies to integrated systems test activities at the MAB and at SMSP, KOPP. The test conductor shall be responsible for performance of the integrated systems test activity, for preparation of the procedure for the activity, for coordinating and integrating and maintaining the activity schedule, and for obtaining the approval of the participating contractors on documents and results related to the conduct of the activity. The test conductor or his appointed representative must be in attendance for all portions of the test activity.

3. Associate Test Conductor - The associate test conductor concept applies to all test and assembly activities associated with the C/P or P/V. The associate test conductor shall certify shipping and/or flight readiness of his subsystem to the Air Force. The associate test conductor shall supervise subsystem operations, support the test conductor and test coordinator, participate in the preparation of the activity procedure, and the scheduling of the activity. The associate test conductor shall be responsible for maintainence of his subsystem log, preparation of the activity report related to his subsystem, and the conduct of tests and preparation of activity procedures for his subsystem. The associate test conductor or his appointed representative shall be in attendance for all portions of the test activity.

4. Logs - A log shall be kept by the test conductor of all jointly performed activities related to integrated systems testing. This log shall be available to the associate test conductor. The logs shall contain a complete chronological record of all pertinent or unusual events that occur during the conduct of

an activity. In particular, the logs shall clearly state the identity of the test conductor and associate test conductor at all times. In addition, each contractor shall maintain his own log of the activity associated with his equipment which shall be a record of all chronological events that have occurred to his equipment and shall include the accumulated operating time on each component within his equipment.

5. Activity Procedure - The activity procedure shall be prepared in a format acceptable to the preparing agency and shall be a clear, logical, specific set of instructions for the conduct of an activity. It shall have a title, date, change block, and approval block. The procedure shall be approved by the associate contractors participating in the activity and submitted to SAFSP-206 and the 6595th ATW for review and approval.

6. Conduct of Activities - All activities shall be conducted in accordance with an activity procedure defined in Para. 5. Deviations from activity procedures shall require mutual concurrence of the test conductor and the associate conductors or their authorized representatives. Any activity, either prescribed or unprescribed which threatens the flight readiness of the P/V or C/P shall be interrupted upon advice of the associate test conductors. The associate contractor shall decide upon a course of action, and unresolved differences shall be presented to the test coordinator for his consideration. Both the associate and GE, as associate contractors shall participate in all activities where an interface exists between their respective AGE, simulators, or vehicle hardware.

APPENDIX 36

INPUT AND OUTPUT FORMAT

SPECIFICATION

CONFIGURATION I-22 AND SUBSEQUENT

18 August 1965
DIN: SVS 5312

No. of pages 78

INPUT AND OUTPUT FORMAT SPECS

CONFIGURATION 1-22 (U)

Prepared By: H. Rosenblum
H. Rosenblum
Command and Control Systems

Approved By: W. H. Cheever
W. H. Cheever
Command and Control Systems

Approved By: T. A. Goodwyn, Jr.
T. A. Goodwyn, Jr. - Manager
Command and Control Systems

Issued By: _____

Date: _____

GENERAL ELECTRIC
SPACECRAFT DEPARTMENT
A Department of the Missile and Space Division
Valley Forge Space Technology Center
P. O. Box 8555 · Philadelphia, Penna. 19101

LIST OF EFFECTIVE PAGES

This document contains 78 pages, consisting of the following:

Title

A

i

1 through 75

INDEX

INPUT CARD FORMATS

Input cards of the Command and Control programs are grouped in six categories: program control, event generation, command handling, MPES handling, support analysis and general subroutines. The input cards under each of these categories are listed below.

1) Program Control
   GEEX

2) Event Generation
   GCONTACT
   GTERMIN
   GCHAP
   GBUSS

3) Command Handling
   GCOMINT
   GTELIM
   GCOMMAND (S)

4) MPES Handling
   GMPESCHN

5) Support Analysis
   GPRESENT

6) General Subroutines
   GTPOT
   GCOAT
   GALOOT
   GTORBEL

There are two categories of input cards: (1) function cards, and (2) data cards. Function cards consist of four major fields: minimum requirements, mandatory field, optional field and end field. The minimum COP requirements are made up of two minor fields: (1) an asterisk (*) in column one immediately followed by the module acronym, and (2) the vehicle number following with at least one space separating these fields. The mandatory, optional and end fields are all fixed sequence, optional fields in free field format.

Data cards consist of four major fields: minimum data card requirements, mandatory field, optional field and end field. The minimum data card requirement is the module or submodule acronym starting in column one. The mandatory, optional and end fields are all fixed sequence, optional fields in free field format.

GEEX

1. MODULE FUNCTION

This module serves two program interfacing functions; to make GE program information accessible to non-GE modules, and to transfer the MPES table from memory to magnetic tape. Program interfacing is implemented through the Reference Pool.

2. FUNCTION CARD

LAYOUT	*ACRONYM	Veh. No.	A or B or C
EXAMPLE	*GEEX	9999	OCV / B

MANDATORY FIELD Not required.

OPTIONAL FIELD

Entry	Form	Units	Delineation	Notes
A or	FXD	N. D.	0 or Blank - Update files 1, 2, 3 and 5 with re-entry data in file 2 referring to the RV	If Jump Key 2 is set the History Tape will not be written.
B or	BCD	-	OCV - Update files 1, 2, 3 and 5 of the reset tape with re-entry data in the file 2 referring to OCV	
C	FXD	N. D.	N - Update file N only when N = 1, 2, 3, or 5.	This option elminates writing the historical tape. The GEEX function requires one operation of the reset tape.

GCONTACT

1. MODULE FUNCTION

To determine the times of entry and exit for 0° (visual) and N° (communications) cones. It will printout the standard acquisition data message.

2. FUNCTION CARD

LAYOUT	*ACRONYM	Veh. No.	#1	#2	#3	#4	#5
EXAMPLE	*GCONTACT	9999	21	32	0	1	0
			#1	#2	#3	#4	#5

MANDATORY FIELD

Entry	Form	Units	Delineation	Notes
#1	FXD	N. D.	Starting rev. number	
#2	FXD	N. D.	Ending rev. number	
#3	FXD	N. D.	Mode flag	Always zero.
#4	FXD	N. D.	Station capability flag 0 - No change in station capability 1 - Station capability to follow on Data Card	Present capability in MPES STATION table.
#5	FXD	N.D.	Output type 0 - Normal output on-line and tape 3 1 - Output on tape 8, on-line and Tape 3	

OPTIONAL FIELD

A	FXD	N.D.	-3 = To list CONTACT table on-line in format of KACQTABL.	This option should appear on a separate card.

GCONTACT

3. DATA CARD

Use only if entry #4 of function card contains a one (1). Specifies individual station capability change(s) for specified revs.

LAYOUT	ACRONYM	#1	#2	#3	#4	END			
EXAMPLE	GCONTACT	6	1	21	24	7	30	35	END
		#1	#2	#3	#4	#2	#3	#4	

MANDATORY FIELD

Entry	Form	Units	Delineation	Notes
#1	FXD	N. D.	Station ID Number 1 - COOK 4 - KODI 6 - BOSS 5 - HULA 9- POGO	One (or more) data cards required for each station to be specified.
#2	FXD	N. D.	Capability code flag -1 Eliminate, do not insert in CONTACT table 0 No capability, insert in CONTACT table 1 TM 2 Track 3 TM, Track 7 PPD, TM, Track	To denote capability station will have on specified revs. Negative sign.

Approved for Release: 2024/01/30 C05099027

GCONTACT

MANDATORY FIELD				
Entry	Form	Units	Delineation	Notes
#3	FXD	N. D.	Starting rev. for capability code indicated in entry #2.	Repeat entry #2, #3, and #4 for any number of flags.
#4	FXD	N. D.	Ending rev. for capability code indicated in entry #2.	
OPTIONAL FIELD			Not required.	
END FIELD				
	BCD	-	END - Last data card flag	Last field on last data card, or on a separate card preceded by module acronym.

GCOMINT

1. MODULE FUNCTION

To verify a command paper tape, or a magnetic tape (logical unit 4) is jump switch three is set.

2. FUNCTION CARD

LAYOUT	*ACRONYM	Veh. No.	#1
EXAMPLE	*GCOMINT	9999	0 / #1

MANDATORY FIELD

Entry	Form	Units	Delineation	Notes
#1	FXD	N. D.	Output type 0 - normal diagnostic information 1 - additional output on tape	

OPTIONAL FIELD

Not required.

GTELIM

1. MODULE FUNCTION

To (1) determine which commands are currently in the vehicle delay lines; (2) provide Vehicle Status Information; and (3) predict Operational Telemetry Values.

2. FUNCTION CARD

LAYOUT	*ACRONYM	Veh. No.	A	B
EXAMPLE	*GTELIM	9999	Erase	3
			A	B

MANDATORY FIELD — Not Required

OPTIONAL FIELD

ENTRY	FORM	UNITS	DELINEATION	NOTES
A	BCD	-	ERASE - Erase delay line	
B	FXD	N.D.	Delay line to be erased	Repeat up to 3 additional times

3. DATA CARD

One or more data cards may be used, but an END card must follow the last data card.

3.1 CIMAGE MESSAGE DATA CARD

LAYOUT	ACRONYM	#1	#2	#3	#4	A				Note: CIMAGE determines which commands are currently in each delay line of the vehicle programmer.
EXAMPLE	CIMAGE	MSG	103	D02/15/62	52317.2	1	8	3 -5 -9 -24 TO 27		
		#1	#2	#3	#4	A_1	A_2	A_1	A_2	

MANDATORY FIELD

Entry	Form	Units	Delineation	Notes
#1	BCD	-	MSG - Message data card flag	
#2	FXD	N. D.	Message number	
#3	BCD	-	DMonth/Day/Year, message loaded	D must precede month (in form DXX/XX/XX).
#4	FLP	SEC.	Time message loaded	System time ≤ 86,400.0

OPTIONAL FIELD

Entry	Form	Units	Delineation	Notes
A_1	FXD	N. D.	Block number	Entries A_1 and A_2 may be repeated collectively as needed to complete message. See note below.
A_2	FXD	N. D.	Word count data	

Note:
If word count is positive, words through that value specified have been accepted. If word count negative, all words except those indicated with negative sign have been accepted. If two negative word counts are separated by the BCD characters, TO, then the sequence including these words has not been accepted. If no word or block number is present, entire block has been accepted.

Approved for Release: 2024/01/30 C05099027

GTELIM

CONTINUE DATA CARD

This type of card may be used where the block word count information on the CIMAGE message data card will not fit on one card.

LAYOUT	ACRONYM	1	A_1	A_2	
EXAMPLE	CIMAGE	CONTINUE		5	32
				A_1	A_2

MANDATORY FIELD

Entry	Form	Units	Delineation
1	BCD	-	Continue - Data Continued Flag
A_1	FXD	N. D.	Block Number
A_2	FXD	N. D.	Word Count Data

Notes

Entries A_1 and A_2 may be repeated collectively as needed to complete message.

OPTIONAL FIELD

Not Required.

3.2 CIMAGE RTC DATA CARD

LAYOUT	ACRONYM	#1	#2	#3	#4			
EXAMPLE	CIMAGE	RTC	3	D02/15/63	2341.7	11	D02/16/63	17245.1
		#1	#2	#3	#4	#2	#3	#4

MANDATORY FIELD

Entry	Form	Units	Delineation	Notes
#1	BCD	-	RTC - RTC data card flag	
#2	FXD	N. D.	Command number	Entries #2, #3, and #4 may be repeated in integer number of groups per card.
#3	BCD	-	DMonth/Day/Year, command loaded	D must precede month (in form DXX/XX/XX).
#4	FLP	SEC.	Time command loaded	System time ≤ 86,400.0

OPTIONAL FIELD — Not required.

Approved for Release: 2024/01/30 C05099027

4. END CARD

LAYOUT	ACRONYM	END	Note: this card is used after the last data card.
EXAMPLE	GTELIM	END	

Approved for Release: 2024/01/30 C05099027

GMPESCHN

1. MODULE FUNCTION

To accept change card requests and to change the values contained in the MPES table as well as insert new values into the table, or to change the size of any individual table in the MPES and adjust the initial address of all tables following it.

2. FUNCTION CARD

Only one option per card allowed.

2.1 TABLE ADJUST OPTION

LAYOUT	*ACRONYM	Veh. No.	A_1	A_2	A_3
EXAMPLE	*GMPESCHN	9999	T / A_1	OACOMM / A_2	25 / A_3

MANDATORY FIELD — Not Required

OPTIONAL FIELD

Entry	Form	Units	Delineation
A_1	BCD	-	T - Table adjust flag
A_2	BCD	-	Table name from MPES directory
A_3	FXD	N.D.	New size

Approved for Release: 2024/01/30 C05099027

GMPESCHN

2.2 INDIVIDUAL ENTRY OPTION

LAYOUT	*ACRONYM	Veh. No.	B_1	B_2	B_3
EXAMPLE	*GMPESCHN	9999	PARAM (B_1)	50 (B_2)	34. 14. - 3. 14 (B_3)

MANDATORY FIELD — Not Required

OPTIONAL FIELD

Entry	Form	Units	Delineation	Notes
B_1	BCD	-	Table name from MPES directory	Individual entry (no optional flag needed).
B_2	FXD	N.D.	Relative location	
B_3	FXD, FLP, BCD and/ or OCT		New value	Up to 20 new values per card may be entered in serial order with at least one space between values. New value must be in same form as value it replaces.

Approved for Release: 2024/01/30 C05099027

GMPESCHN

2.3 Add/Delete option

To add or delete a complete table from MPES and MPES Directory

LAYOUT	*ACRONYM	Veh No.	C_1	C_2	C_3	C_4	C_5
EXAMPLE	*GMPESCHN	9999	DIRECT C_1	ADD C_2	NEW C_3	PARAM C_4	50 C_5

MANDATORY FIELD — Not Required

OPTIONAL FIELD

Entry	Form	Units	Delineation	Notes
C_1	BCD	-	DIRECT - BCD flag	
C_2	BCD	-	ADD - Add new table flag DELETE - Delete an existing table flag	
C_3	BCD	-	BCD name of table to be added or deleted	
C_4	BCD	-	BCD name of existing table after which new table is to be added	Blank if delete flag used
C_5	FXD	N.D.	Length of new table	Blank if delete flag used

2.4 Change Directory option

To change data in MPES Directory only, i.e., DIRECT table

LAYOUT	*ACRONYM	Veh No.	D_1	D_2	D_3
EXAMPLE	*GMPESCHN	9999	DIRECT D_1	DIRECT + 21 D_2	NEW D_3

MANDATORY FIELD — Not Required

OPTIONAL FIELD

Entry	Form	Units	Delineation	Notes
D_1	BCD	-	DIRECT - BCD flag	
D_2	BCD	-	Relative location of entry to be changed	
D_3	BCD	-	BCD name of table, if entry D_2 is odd. New octal contents (followed by a B) if entry D_2 is even.	

Approved for Release: 2024/01/30 C05099027

GMPESCHN

2.5 Secure table option

To change data in the secure table by means of data cards

LAYOUT	*ACRONYM	Veh No.	E_1	E_2
EXAMPLE	*GMPESCHN	9999	SECURE #1	

MANDATORY FIELD — Not Required

OPTIONAL FIELD

Entry	Form	Units	Delineation	Notes
E_1	BCD	-	SECURE - Secure table adjust flag	
E_2	FXD	N.D.	Tape drive unit no. Blank	If card prestored If card input on-line

Approved for Release: 2024/01/30 C05099027

3. DATA CARD

One or more data cards may be used, but an END card must follow the last data card.

LAYOUT	#1	#2	#3
EXAMPLE	Secure	20	127432157663
	#1	#2	#3

MANDATORY FIELD

Entry	Form	Units	Delineation	Notes
1	BCD	-	SECURE - Data card flag	Card columns 1-6
2	FXD	N.D.	Relative location to change	Card columns 8-10. Right justified.
3	OCT	N.D.	Octal secure key	Card columns 12-23. Right justified.

OPTIONAL FIELD Not Required

4. END CARD

LAYOUT	END	NOTE: End in card columns 1-3. An end card must follow last data card.
EXAMPLE	END	

GPRESENT

1. MODULE FUNCTION

To provide a means for retrieving data from the current MPES tables and the Reference Pool.

2. FUNCTION CARD

LAYOUT	*ACRONYM	Veh. No.	#1	A	B	C	D	E	F	Note: Optional field is fixed sequence.
EXAMPLE	*GPRESENT	9999	CONTACT	A	U	REV 1 thru 4	L 1 thru 6	Z	M	
			#1	A_1	B_1	C_2	D_2	E_1	F_1	

MANDATORY FIELD

Entry	Form	Units	Delineation	Notes
#1	BCD	-	Print selection flag	Only one flag may be used per card.
			ALLTAB - print all MPES tables	Enter letters ALLTAB
			Table Name - print a selected table or tables	Enter actual name, more than one name may be entered in serial order with at least one blank space between names.
			Name THRU Name - print a sequence of tables	Enter actual table names of beginning and ending table separated by the letters THRU.
			POOL - print items from Reference Pool	To retrieve preassigned item(s) from Reference Pool.

Approved for Release: 2024/01/30 C05099027

GPRESENT

OPTIONAL FIELD

Entry	Form	Units	Delineation	Notes
A_1	BCD	-	A - off-line printing	If this entry is left blank, printing will be on-line.
A_2	BCD	-	B - on-line and off-line printing	
B_1	BCD	-	U - Unclassified	If this entry is left blank, classification will be secret or less.
B_2	BCD	-	C - Confidential or less	
B_3	BCD	-	T - Top secret or less	
B_4	BCD		R1, R2, R3, R4 - data with additional restrictions.	
C_1	BCD	-	REV N - where N is desired orbit or orbits	To specify more than one rev enter in form REV N_1 N_2 N_3 etc. with at least one space between numbers.
C_2	BCD	-	REV X THRU Y - orbit sequence desired	Enter letters REV followed by X as starting rev and Y as ending rev separated by the letters THRU. If entry is left blank, all orbits will be obtained.
D_1	BCD	-	L N - where N is desired location or locations	To specify more than one location, enter in form L N_1 N_2 N_3 etc, with at least one space between numbers.
D_2	BCD	-	L X THRU Y	Enter letter L followed by X as starting location and Y as ending location separated by the letters THRU. If this entry is left blank, all locations will be obtained.
E_1	BCD	-	Z - execute zero data suppression	If this entry is left blank, zero data will not be suppressed.
F_1	BCD	-	M - flag when additional parameters of a request are continued on following function card.	If this entry is left blank, no further data will appear.

Approved for Release: 2024/01/30 C05099027

GTERMIN

1. MODULE FUNCTION

To determine the impact point of a vehicle (either RV or OCV) given a time at which retro-fire is initiated. The second function is to determine a time to initiate retro-fire when given an impact latitude and revolution number of either vehicle.

2. FUNCTION CARD

LAYOUT	*ACRONYM	Veh. No.	#1	#2	#3	#4	#5	#6	#7	#8	#9	#10	#11	#12	
EXAMPLE	*GTERMIN	9999	0	0.	0	0	1	0	0.	0.	996.3	D03/03/62	1086.5	0	
			#1	#2	#3	#4	#5	#6	#7	#8	# 9	# 10	#11	#12	

MANDATORY FIELD

Entry	Form	Units	Delineation	Notes
#1	FXD	N. D.	Rev. number for de-orbit	Zero if deboost time is specified, (entry #11)
#2	FLP	DEG.	Geodetic impact latitude	Zero if not used.
#3	FXD	N. D.	Direction of Approach 0 - North to South 1 - South to North	
#4	FXD	N. D.	Mode flag	Always zero.

GTERMIN

MANDATORY FIELD

Entry	Form	Units	Delineation	Notes
#5	FXD	N. D.	Type of vehicle 0 - Orbit Control 1 - Re-entry	
#6	FXD	N. D.	Output instruction 0 - No binary ephemeris tape 1 - Write binary tape on Unit 6	
#7	FLP	DEG.	Pitch down angle	Set to zero if nominal is to be used.
#8	FLP	DEG.	Yaw around angle	Set to zero if nominal is to be used. $-180 < \text{Yaw Angle} < 180$
#9	FLP	FT/SEC	Velocity increment	Set to zero if nominal is to be used.
#10	BCD	-	DMonth/Day/Year	D must precede month (in form DXX/XX/XX).
#11	FLP	SEC.	Time	Set to zero if latitude (entry #2) is given. Deboost system time $\leq$ 86,400.0. Set to zero if date is zero.
#12	FXD	N. D.	Phase flag 0 - No phase card follows 1 - Phase card follows.	

OPTIONAL FIELD

Not required.

Approved for Release: 2024/01/30 C05099027

GTERMIN

3. DATA CARD

LAYOUT	ACRONYM	#1	#2	#3	#4	#5	#6	#7	#8	#9
EXAMPLE	GTERMIN	1	0	0	2.	0.	-3.	3600.	2100000.	25500.

MANDATORY FIELD

Entry	Form	Units	Delineation	Notes
#1	FXD	N.D.	1 - Integrate from retro-fire 2 - Integrate from burn-out	
#2	FXD	N.D.	0 - ADBARV 1 - Inertial spherical	
#3	FLP	Lbs.	Weight	Used only with OCV, otherwise zero
#4	FLP	Deg.	Right asc. or longitude	Plus west of Greenwich
#5	FLP	Deg.	Declination or latitude	Plus north
#6	FLP	Deg.	Flight path angle	ADBARV measures FPA from geocentric vertical down. Inertial spherical measures FPA from horizontal up.
#7	FLP	Deg.	Azimuth	
#8	FLP	Feet	Radial distance	
#9	FLP	Ft/Sec	Velocity magnitude	

Approved for Release: 2024/01/30 C05099027

GTPOT

1. MODULE FUNCTION

To print on-line and generate a teletype tape for use by the recovery forces.

2. FUNCTION CARD

LAYOUT	*ACRONYM	Veh. No.	#1	#2	A	B
EXAMPLE	*GTPOT	9999	0 (#1)	1 (#2)	0 (A)	

MANDATORY FIELD

Entry	Form	Units	Delineation	Notes
#1	FXD	N.D.	Recovery rev. 0 - primary 1 - alternate	
#2	FXD	N.D.	Description of vehicle 0 - Recovery 1 - Orbit Control	

OPTIONAL FIELD

A	FLP	Deg.	Geodetic latitude	Zero if not required
B	FXD	N.D.	Teapot prediction no.	Zero or blank if not required

GCHAP

1. MODULE FUNCTION

To generate an orbit adjust command where the velocity adjustment is specified or in which the orbit adjust command is calculated on the basis of a specified, desired ground track, or in which a new perigee and apogee are specified.

2. FUNCTION CARD

2.1 Using velocity increment from ADJ table

LAYOUT	*ACRONYM	Veh No.	#1	A	B
EXAMPLE	*GCHAP	9999	1	0	5
			#1	A	B

MANDATORY FIELD

Entry	Form	Units	Delineation	Notes
#1	FXD	N.D.	Altitude criteria 0 - Use 1 - Do Not Use	

OPTIONAL FIELD

A	FXD	N.D.	0 - Option flag	
B	FXD	N.D.	Entry no. in data block 2 ADJ table to be used	

Approved for Release: 2024/01/30 C05099027

2.2 Specify velocity increment option

LAYOUT	*ACRONYM	Veh No.	#1	A	B	C	D
EXAMPLE	*GCHAP	9999	0	1	D01/09/62	7640.2	25.2
			#1	A	B	C	D

MANDATORY FIELD

Entry	Form	Units	Delineation	Notes
#1	FXD	N.D.	Altitude criteria 0 - Use 1 - Do Not Use	

OPTIONAL FIELD

A	FXD	N.D.	1 - Option flag	
B	FXD	N.D.	Rev No. to apply thrust	Plus - Thrust applied at apogee Minus - Thrust applied at perigee
C	FLP	Ft/Sec	Desired velocity increment	
OR				
B	BCP	-	DMonth/Day/Year	D must precede month (in form DXX/XX/XX)
C	FLP	Sec	System time to apply thrust	Time ≤ 86,400.0
D	FLP	Ft/Sec	Desired velocity increment	

GCHAP

2.3 Specify new perigee or apogee height option

LAYOUT	*ACRONYM	Veh No.	#1	A	B	C
EXAMPLE	*GCHAP	9999	0	2	14	89
			#1	A	B	C

MANDATORY FIELD

Entry	Form	Units	Delineation	Notes
#1	FXD	N.D.	Altitude criteria 0 - Use 1 - Do Not Use	

OPTIONAL FIELD

A	FXD	N.D.	2 - Option flag	
B	FXD	N.D.	Rev No. to apply thrust	
C	FLP	N.M.	Desired height	Plus - for apogee Minus - for perigee

Approved for Release: 2024/01/30 C05099027

GCHAP

2.4 Specify latitude and longitude option

LAYOUT	*ACRONYM	Veh No.	#1	A	B	C	D	E	F	G	H
EXAMPLE	*GCHAP	9999	1	3	0	1	12		15	56.2	159.0
			#1	A	B	C	D		F	G	H

MANDATORY FIELD

Entry	Form	Units	Delineation	Notes
#1	FXD	N.D.	Altitude criteria 0 - Use 1 - Do Not Use	

OPTIONAL FIELD

A	FXD	N.D.	3 - Option flag	
B	FXD	N.D.	0 - Not used	
C	FXD	N.D.	Direction of pass 0 - North to South 1 - South to North	
D	FXD	N.D.	Rev. No. to apply thrust	
	OR			
	BCD	-	DMonth/Day/Year	D must precede date (in form DXX/XX/XX)
E	FLP	Sec	System time	Time $\leq$ 86,400.0
F	FXD	N.D.	Rev. No. on which to appear over specified latitude and longitude	Blank if entry D is Rev. No.
G	FLP	DEG.	Desired latitude crossing	Plus for North, minus for South
H	FLP	DEG.	Desired longitude crossing	Plus west of Greenwich

Approved for Release: 2024/01/30 C05099027

GCHAP

2.5 Define new orbit option

LAYOUT	*ACRONYM	Veh No.	#1	A	B	C	D	E
EXAMPLE	*GCHAP	9999	1	5	21	3.5	102	88
			#1	A	B	C	D	E

MANDATORY FIELD

Entry	Form	Units	Delineation	Notes
#1	FXD	N.D.	Altitude criteria 0 - Use 1 - Do Not Use	

OPTIONAL FIELD

A	FXD	N.D.	Option flag 4 - Specify apogee altitude 5 - Specify orbital period	
B	FXD	N.D.	Rev. No. to apply thrust	
C	FLP	DEG.	Desired argument of perigee	
D	FLP	N.M.	Desired perigee height	
E	FLP	N.M.	Desired apogee height	If entry A = 4
	OR			
	FLP	MIN.	Desired period	If entry A = 5

Approved for Release: 2024/01/30 C05099027

GBUSS

1. MODULE FUNCTION

The principle function is to determine the activation time of the airborne BUSS package, either in the real time or next orbit mode, in order to impact at a given latitude on a given rev. number. An alternate capability is to determine the impact point given the BUSS activation time.

An additional function is to predict BUSS telemetry output. The assumption is made that the vehicle is flying normally stabilized except known attitude errors (such as fly reverse) may be input by data card. Telemetry predictions can be made at a given time or over a selected station or set of stations on a given rev. number or span of rev. numbers.

2. FUNCTION CARD

LAYOUT	*ACRONYM	Veh. No.	#1	#2	#3	#4	#5	#6
EXAMPLE	*GBUSS	9999	2	D11/18/63	8729.4	0	0	1 6 9
			#1	#2	#3	#4	#5	#6

MANDATORY FIELD

Entry	Form	Units	Delineation	Notes
Type I Function Card				
#1	FXD	N.D.	0 - Determine Buss time to impact at desired latitude.	
#2	FXD	N.D.	Mode of Operation 0 - Real Time 1 - Next Orbit	
#3	FXD	N.D.	Rev. number for desired impact	
#4	FLP	DEG.	Geodetic impact latitude	
Type II Function Card				
#1	FXD	N.D.	1 - Determine impact point given BUSS activation time.	
#2	FXD	N.D.	Mode of Operation 0 - Real Time 1 - Next Orbit	
#3	BCD	-	D/ month/ day/ year	D must precede month (in form DXX/ XX/ XX)
#4	FLP	SEC.	System time on above day	Time $\leq$ 86,400.0

GBUSS

Entry	Form	Units	Delineation	Notes
Type III Function Card				
#1	FXD	N.D.	2 - Predict Telemetry	
#2	FXD	N.D.	Rev. Number to start prediction	
#3	FXD	N.D.	Rev. Number to end prediction	
	or			
#2	BCD	-	D/ month/ day/ year Prediction at a given time	D must precede month (in form DXX/ XX/ XX)
#3	FLP	SEC.	System time on above day	Time $\leq$ 86,400.0
#4	FXD	N.D.	0 - Use nominal Δt in prediction span	
	FLP	SEC.	Δt - time between printouts in prediction span	
#5	FXD	N.D.	0 - No data card follows	
			1 - Data card follows	
#6	FXD	N.D.	Eliminate Station Number	Up to 4 stations may be eliminated for each rev.
			1 - COOK 5 - HULA 9 - POGO	
			4 - KODI 6 - BOSS	
OPTIONAL FIELD			Not Required	

Approved for Release: 2024/01/30 C05099027

GBUSS

3. DATA CARD

LAYOUT	ACRONYM	#1	#2	#3
EXAMPLE	GBUSS	1.2 #1	0.8 #2	2.3 #3

MANDATORY FIELD

Entry	Form	Units	Delineation	Notes
#1	FLP	DEG.	Roll Error	Positive clockwise looking forward.
#2	FLP	DEG.	Yaw Error	Positive left looking forward.
#3	FLP	DEG.	Pitch Error	Positive up looking forward.

OPTIONAL FIELD

Not Required.

Approved for Release: 2024/01/30 C05099027

GCOAT

1. MODULE FUNCTION

To generate and modify the cold orbit adjust table (COAT) in file 2 of the reset tapes.

2. FUNCTION CARD

LAYOUT	*ACRONYM	Veh. No.	#1	#2	#3	#4
EXAMPLE	*GCOAT	9999	CHANGE	24	D05/14/65	7583.2
			#1	#2	#3	#4

MANDATORY FIELD

Entry	Form	Units	Delineation	Notes
#1	BCD	-	Enter one (1) of the following BCD flats- DELETE CHANGE ENTER PRINT	Entry #1 is the only entry for the print option. Printing will be on-line and on tape unit 3.
ENTER OPTION				One of the following options is required.
#2	BCD	-	DMonth/Day/Year of adjust	D must precede month (in form DXX/XX/XX).
#3	FLP	Seconds	System time of adjust	Time $\leq$ 86,400.0
#4	FLP	Ft/Sec	Velocity increment of adjust	
DELETE OPTION				
#2	BCD	-	ALL - All adjusts in table will be deleted (leave remaining fields blank)	Enter one (1) of the following four (4).

OR

GCOAT

Entry	Form	Units	Delineation	Notes
			SPAN - All adjusts within specified rev or time span will be deleted.	
			OR	
			POST - All adjusts after specified rev or time will be deleted.	
			OR	
			PRE - All adjusts prior to specified rev or time will be deleted.	
#3	FLP	N.D.	Rev number to start	
#4	FLP	N.D.	Rev number to stop	Leave entry #4 blank if post or pre is used, and entry 4 > entry 3
OR				
#3	BCD	-	DMonth/Day/Year	D must precede month (in form DXX/XX/XX)
#4	FLP	Seconds	System time	System time ≤ 86,400.0
#5	Bed	-	DMonth/Day/Year	D must precede month (in form DXX/XX/XX)
#6	FLP	Seconds	System time	System time ≤ 86,400.0
				Leave entries #5 and #6 blank if post or pre is used, and entries #5, #6 must be later than entries #3, #4.

Approved for Release: 2024/01/30 C05099027

GCOAT

Entry	Form	Units	Delineation	Notes
CHANGE OPTION				
#2	FLP	N.D.	Rev number of adjust which is to be changed	Entries #2, #3 and #4 may be repeated as necessary.
#3	BCD	-	DMonth/Day/Year	D must precede month (in form DXX/XX/XX)
#4	FLP	Seconds	System time of new adjust	System time $\leq$ 86,400.0

GALOOT

1. MODULE FUNCTION

GALOOT determines and prints Torbel Orbital Elements from best fit ephemeris (KINJFUN) vectors, and by option, will punch the Torbel elements on GMPESCHN cards.

2. FUNCTION CARD

LAYOUT	*ACRONYM	Veh No.	#1	#2
EXAMPLE	*GALOOT	9999	10	PUNCH
			#1	#2

MANDATORY FIELD

Entry	Form	Units	Delineation	Notes
#1	FXD	N.D.	Rev number to be used as the final rev no. to define interval for the last input set.	
#2	BCD	-	PUNCH - If TORBEL/ORBEL cards desired - Blank if no punching required	

OPTIONAL FIELD — Not Required

GTORBEL

1. MODULE FUNCTION

GTORBEL generates a listable teletype message containing orbital elements, either BREAKWELL or TORBEL, and predicted geoposition and altitude computed from these elements, at requested check points. The message may contain up to four sets of TORBEL elements provided that they are contained on the reset tape and are needed to predict the requested revolution span.

2. FUNCTION CARD

LAYOUT	*ACRONYM	Veh No.	#1	#2	#3	#4
EXAMPLE	*GTORBEL	9999	0	5	4	1
			#1	#2	#3	#4

MANDATORY FIELD

Entry	Form	Units	Delineation	Notes
#1	FXD	N.D.	0 - BREAKWELL option 1 - TORBEL option	
#2	FXD	N.D.	Number of revs to be predicted	
#3	FLP	Seconds	Time interval for geoposition printout	
#4	FXD	N.D.	Output option 0 - On-line 1 - On-line and paper tape	

OPTIONAL FIELD — Not Required

Approved for Release: 2024/01/30 C05099027

GCOMMAND

1. MODULE FUNCTION

To translate given event times into a command list for display on output media. Primary output is a command paper tape which is sent to a specified tracking station for loading into the command system of the orbiting vehicle.

2. FUNCTION CARD

LAYOUT	*ACRONYM	Veh. No.	#1	#2	#3	#4	#5	#6	#7	#8	#9	#10	#11	#12	#13	#14	#15	#16	#17	# 18
EXAMPLE	*GCOMMAND	9999	6	13	2	3	0	0	1	0	1	0	2	0	0	1	0	1	1	15
			#1	#2	#3	#4	#5	#6	#7	#8	#9	#10	#11	#12	#13	#14	#15	#16	#17	#18

MANDATORY FIELD

Entry	Form	Units	Delineation	NOTES
#1	FXD	N.D.	Station Number 1 - COOK 4-KODI 6 - BOSS 5-HULA 9 - POGO	Receiver of operational paper tape.
#2	FXD	N.D	Load Rev. Number	
#3	FXD	N.D.	Output Option 0 - On-line print, off-line print, paper tape & mag tape image, CBL, ACL, chronological list 1 - Same as 0, except no ACL. 2 - Same as 0, except no paper tape and mag. tape image.	

Approved for Release: 2024/01/30 C05099027

GCOMMAND

MANDATORY FIELD

Entry	Form	Units	Delineation	Notes
#4	FXD	N.D.	Operational mode 0 - NORMAL 1 - MIXED 2- TCONLY 3- ALTER	0 - Assembles sequences on orbital basis from MPES. 1- Similar to normal plus TC can enter own commands/ sequences. COMM and DEFINE data cards may be used. 2- TC inputs commands/sequences. COMM and DEFINE data cards may be used. 3- Alters ACL by TC input. DEL,ADD, and SPEC cards may be used.
#5	FXD	N.D.	Assemble secure code 0- Do not assemble secure commands 1- Assemble secure commands- eliminate opening command link in each station pass from transmission to execution. 2- Assemble secure commands- increment security key index for each PPD ON from transmission to execution. N- Assemble secure commands-use N as security key index- eliminate opening command link in each station pass from transmission to execution.	$3 \leq N \leq 127$

GCOMMAND

MANDATORY FIELD

Entry	Form	Units	Delineation	Notes
#6	FXD	N.D.	Redundancy Code 0 - No redundancy 1 - Sequence redundancy 2 - Orbital redundancy	 REDUN data card must be used for order and sequence. REDUN data card must be used for desired orbit intervals.
#7	FXD	N.D.	Delay Line 1 0 - Load, erase 1 - Do not load 2 - Load, do not erase	
#8	FXD	N.D.	Delay Line 2 0 - Load, erase 1 - Do not load 2 - Load, do not erase	
#9	FXD	N.D.	Delay Line 3 0 - Load, erase 1 - Do not load 2 - Load, do not erase	
#10	FXD	N.D.	Delay Line 4 0 - Load, erase 1 - Do not load 2 - Load, do not erase	
#11	FXD	N.D.	Loading sequence 0 - Load first available N - Load delay line N first	

Approved for Release: 2024/01/30 C05099027

GCOMMAND

MANDATORY FIELD

Entry	Form	Units	Delineation	Notes
#12	FWD	N.D.	Not Used	Always zero.
#13	FXD	N.D.	Last Command 0 - Last command on message tape RTC PPD OFF 1 - Last command on message tape not specified	
#14	FXD	N.D.	CHAP 0 - Assemble CHAP 1 - Do not assemble CHAP	A zero for entries #14 ,#15 ,#16 or #17 generates command sequence during NORMAL and MIXED modes.
#15	FXD	N.D.	TERMIN 0 - Assemble TERMIN 1 - Do not assemble TERMIN	
#16	FXD	N.D.	CONTACT 0 - Assemble CONTACT 1 - Do not assemble CONTACT	
#17	FXD	N.D.	GFE 0- Assemble GFE 1 - Do not assemble GFE	
#18	FXD	N.D.	Widening 0 - Start at Load Rev. XX - Rev. to start widening	

GCOMMAND

MANDATORY FIELD

Entry	Form	Units	Delineation	Notes
#19	FLP	SEC.	Initial widening (optional)	If blank, values will be taken from MPES. If initial widening is present widening rate must be present.
#20	FLP	SEC/REV	Widening rate (optional)	

OPTIONAL FIELD

Not Required.

Approved for Release: 2024/01/30 C05099027

GCOMMAND

3. DATA CARDS

REDUN card used when redundancy code of function card (entry #6) is 1 or 2.
DEL, ADD, SPEC card may be used when in ALTER mode (entry #4 of function card).
COMM and DEFINE card used when in TCONLY or MIXED mode (entry #4 of function card).

3.1 REDUN DATA CARD

LAYOUT	ACRONYM	#1	#2	#3		
EXAMPLE 1 OR	GCOMMAND	REDUN #1	3 #2	124	160 #3	123
EXAMPLE 2	GCOMMAND	REDUN #1	1 #2	6 #3	12 #2	14 #3

MANDATORY FIELD - TYPE I

Entry	Form	Units	Delineation	Notes
#1	BCD	-	REDUN - Redundancy card flag	These items used when entry #6 of function card is 1 (Example 1)
#2	FXD	N.D.	Order of Redundancy 1 - Places sequence into 2 delay lines 2 - Places sequence into 3 delay lines 3 - Places sequence into 4 delay lines	
#3	FXD	N.D.	Sequence (s) to be loaded redundantly	More than one sequence number may be used; each being separated by at least one blank column.

Approved for Release: 2024/01/30 C05099027

GCOMMAND

MANDATORY FIELD - TYPE II

Entry	Form	Units	Delineation	Notes
#1	BCD	-	REDUN-Redundancy card flag	These items used when entry #6 of function card is 2 (Example 2)
#2	FXD	N.D.	Rev to begin orbital redundancy	Repeat entries #2 and #3 for additional sets of orbits.
#3	FXD	N.D.	Rev to end orbital redundancy	

OPTIONAL FIELD

Not required.

GCOMMAND

3.2 COMM DATA CARD

LAYOUT	ACRONYM	#1	#2	#3	#4	A	B	C	D			Note: COMM card used when in TCONLY or MIXED mode (entry #4 of function card).
EXAMPLE	GCOMMAND	COMM (#1)	301 (#2)	1 (#3)	D01/20/62 (#4)				45000.2	C (B_1)	23 (B_2)	

MANDATORY FIELD

Entry	Form	Units	Delineation	Notes
#1	BCD	-	COMM - Command card flag.	Entries #3 and #4 are required for SSPC, DSPC and sequences. They must be omitted for RTC and HYBRIDS.
#2	FXD	N.D.	Desired Command or Sequence Number	
			1-16 RTC	
			101-157 Sequence	
			170-239 SSPC #2	
			240-289 SSPC #1	
			290 Dummy	
			291 DSPC #6	
			292-307 DSPC #1	
			308-369 DSPC #4	
			370-430 DSPC #5	
			450-474 DSPC #2	
			475-499 DSPC #3	
			500-510 HYBRID	
#3	FXD	N.D.	Time Flag	Enter 1, 2, or 3. See entry #4 delineation.

Approved for Release: 2024/01/30 C05099027

GCOMMAND

MANDATORY FIELD

Entry	Form	Units	Delineation	Notes
#4			If flag = 1	If entry #3 has a one (1) indicated, enter these 2 items.
	BCD	-	DMonth/ Day/ Year	D must precede month (in form DXX/ XX/ XX).
	FLP	SEC.	SECONDS	System time $\leq$ 86,400.0
			If flag = 2	If entry #3 has a 2 indicated, enter these 3 items.
	FXD	N.D.	Station number	
	FXD	N.D.	Revolution	
	FLP	SEC.	Time bias (to nearest tenth second)	
			If flag = 3	If entry #3 has a 3 indicated, enter these 4 items.
	FLP	DEG.	Geodetic latitude nearest tenth degree preceded by sign as +XX.XX or -XX.X.	No sign assumed as positive
	BCD	-	Direction of pass, enter NS or SN	
	FXD	N.D.	Revolution number	
	FLP	SEC.	Time bias (to nearest tenth second)	

OPTIONAL FIELD

Entry	Form	Units	Delineation	Notes
A_1	BCD	-	A - Time duration Flag	
A_2	FLP	SEC.	Time duration	
B_1	BCD	-	C - Key Index for secure command Flag	
B_2	FXD	N.D.	Key index	Key Index $\leq$ 127
C_1	BCD	-	D - Sequence number Flag	To assign a seq. no. to the command desired or to assign a new seq. no. to a desired seq.
C_2	FXD	N.D.	N - Sequence number	101 $\leq$ N $\leq$ 157
D_1	BCD	-	B -Specified delay line Flag	
D_2	FXD	N.D.	M -Delay line number	1 $\leq$ M $\leq$ 4

Approved for Release: 2024/01/30 C05099027

GCOMMAND

3.3 "HAND SPEC" DATA CARD

LAYOUT	ACRONYM	#1	#2	#3	#4	#5	#6	#7	#8	#9	#10	#11	#12
EXAMPLE	GCOMMAND	SPEC	5	D4	2	32	9	3	151	D02/24/63	529.7	417.2	52.0

Note: SPEC card used when in ALTER mode (entry #4 of function card).

MANDATORY FIELD

Entry	Form	Units	Delineation	Notes
#1	BCD	-	SPEC - HAND SPEC data card flag	
#2	FXD	N. D.	Mode indicator 1 - Enable function from T_1 to $(T_1 + \Delta t)$ 2 - Enable function from T_1 to $(T_1 + \Delta t)$ and disable at $(T_1 + \Delta t)$ 3 - Disable function from T_1 to $(T_1 + \Delta t)$ 4 - Disable function from T_1 to $(T_1 + \Delta t)$ and enable at $(T_1 + \Delta t)$ 5 - Enable one shot-function (at $T_1 + \Delta t$) 6 - Disable one shot-function (at $T_1 + \Delta t$)	
#3	BCD	-	Command type D1 - DSPC #1 D5 - DSPC #5 D4 - DSPC#4 D6 - DSPC #6 S1 - SSPC#1 S2 - SSPC#2	DSPC - Double stored program command SSPC - Single stored program command.

GCOMMAND

MANDATORY FIELD

Entry	Form	Units	Delineation	Notes
#4	FXD	N.D.	Word specified 1 - First word 2 - Second word	
#5	FXD	N.D.	Bit position	
#6	FXD	N.D.	Intergral order number	Sequential number of a command in ACL.
#7	FXD	N.D.	Fractional order number	Used to number a command between 2 intergrally numbered commands.
#8	FXD	N.D.	Sequence number	
#9	BCD	-	DMonth/ Day/ year	D must precede month (in form DXX/ XX/ XX).
#10	FLP	SEC.	Time of Spec period start or T_1 portion of time of one shot bias.	First one shot start at T_1 from entry #10 +Δt from entry #11.
#11	FLP	SEC.	Δt to end of Spec period or to next one shot	
#12	FLP	SEC.	Δt to next one shot if in one shot mode	Repeat entry #12 for additional one shots.

OPTIONAL FIELD — Not required.

GCOMMAND

3.4 ADD DATA CARD

LAYOUT	ACRONYM	#1	#2	#3	#4	#5	#6	A	B	C	D
EXAMPLE	GCOMMAND	ADD	131	1	D12/20/62 11362.5					67	6	C	22
		#1	#2	#3	#4					#5	#6	A_1	A_2

Note: ADD card used when in ALTER mode (entry #4 of function card).

MANDATORY FIELD

Entry	Form	Units	Delineation
#1	BCD	-	ADD - Insert card flag
#2	FXD	N. D.	Desired Command or Sequence Number

1-16	RTC
101-157	Sequence
170-239	SSPC #2
240-289	SSPC #1
290	Dummy
291	DSPC #6
292-307	DSPC #1
308-369	DSPC #4
370-430	DSPC #5
450-474	DSPC #2
475-499	DSPC #3
500-510	HYBIRD

Notes

Entries #3, #4, #5 and #6 are required for SSPC, DSPC and sequences. They must be omitted for RTC and ~~HYBRIDS~~.

Approved for Release: 2024/01/30 C05099027

GCOMMAND

MANDATORY FIELD

Entry	Form	Units	Delineation	Notes
#3	FXD	N.D.	Time flag	Enter 1,2, or 3. See entry #4 delineations.
#4			If flag = 1	
			DMonth/Day/Year	If entry #3 has a one (1) indicated, enter these 2 items. D must precede month (in form DXX/XX/XX). System time $\leq$ 86,400.
	FLP	SEC.	Seconds	
			If flag = 2	If entry #3 has a 2 indicated, enter these 3 items.
	FXD	N.D.	Station number	
	FXD	N.D.	Revolution	
	FLP	SEC.	Time bias (to nearest tenth second)	
			If flag = 3	If entry #3 has a 3 indicated, enter these 4 items.
	FLP	DEG.	Geodetic latitude nearest tenth degree preceded by sign as +XX.X or -XX.X	No sign assumed as positive.
	BCD	-	Direction of pass, enter NS or SN	
	FXD	N.D.	Revolution number	
	FLP	SEC.	Time bias (to nearest tenth second)	
#5	FXD	N.D.	Integral order number designator	Sequential number of a command in ACL.
#6	FXD	N.D.	Fractional order number designator	Used to number a command between 2 integrally numbered commands.

Approved for Release: 2024/01/30 C05099027

GCOMMAND

OPTIONAL FIELD

Entry	Form	Units	Delineation	Notes
A_1	BCD	-	A - Time duration flag	
A_2	FLP	SEC.	Time duration	
B_1	BCD	-	C - Key Index for secure command flag	
B_2	FXD	N.D.	Key Index	Key Index $\leq$ 127
C_1	BCD	-	D - Sequence number flag	To assign a seq. no. to the command desired or to assign a new seq. no. to a desired seq.
C_2	FXD	N.D.	N - Sequence number	$101 \leq N \leq 157$
D_1	BCD	-	B -Specified delay line Flag	
D_2	FXD	N.D.	M -Delay line number	$1 \leq M \leq 4$

GCOMMAND

3.5 DEFINE DATA CARD

LAYOUT	ACRONYM	#1	#2	#3	#4	
EXAMPLE	GCOMMAND	DEFINE	15	54B	INTERROG ATE*TIME R	
		#1	#2	#3	#4	

Note: DEFINE card used when in TCONLY or MIXED mode (entry #4 of function card).

MANDATORY FIELD

Entry	Form	Units	Delineation	Notes
#1	BCD	-	DEFINE - Define card flag	
#2	FXD	N.D.	New command number	

1-16	RTC
170-239	SSPC #2
240-289	SSPC #1
290	DUMMY
291	DSPC #6
292-307	DSPC #1
308-369	DSPC #4
370-430	DSPC #5
450-474	DSPC #2
475-499	DSPC #3
500-510	HYBIRD

Approved for Release: 2024/01/30 C05099027

GCOMMAND

MANDATORY FIELD

Entry	Form	Units	Delineation		Notes
#3	OCT	N. D.	Function bits		Not including parity
			RTC 6 bits	bits 2 - 7	2 Octal Characters
			SSPC 12 bits	bits 25 - 36	4 Octal Characters
			DSPC 48 bits	bits 25 - 36 first word	4 Octal Characters
				1 - 24 second word	8 Octal Characters
				25 - 36 third word	4 Octal Characters
#4	BCD	-	Description of command		See note below

NOTE: BCD descriptors must be in a maximum of 5 eight character groups. Each 8 character field must be separated by at least one blank space. To indicate spacing between english words within a field, an asterisk must be used. To leave a blank space would terminate the computer word due to the free field format.

OPTIONAL FIELD Not required

Approved for Release: 2024/01/30 C05099027

GCOMMAND

3.6 DEL CARD DATA

LAYOUT	ACRONYM	#1	#2	#3	Note: DEL card used when in ALTER mode (entry #4 of function card.)
EXAMPLE	GCOMMAND	DEL	4	0	
		#1	#2	#3	

MANDATORY FIELD

Entry	Form	Units	Delineation	Notes
#1	BCD	-	DEL-Delete card flag	
#2	FXD	N.D.	Integral order number designator	Sequential number given command in ACL.
#3	FXD	N.D.	Fractional order number designator	Used to number a command between 2 integrally numbered commands. Entries #2 and #3 may be repeated for additional order numbers.

OPTIONAL FIELD — Not required.

4. END CARD

LAYOUT	ACRONYM	END	Note: This card must follow the last GCOMMAND data card used.
EXAMPLE	GCOMMAND	END	

Approved for Release: 2024/01/30 C05099027

ORBIT ADJUST NO. 27

REV	DATE MO	DAY	YEAR	TIME HRS	MIN	SEC	SYS.TIME	BURN TIME SEC	STATUS	DLTAV FT/SEC.
5	11	17	1964	3	7	54.4	11274.4	132.4152	PLANNED	100.000

ORBIT ADJUST NO. 28

REV	DATE MO	DAY	YEAR	TIME HRS	MIN	SEC	SYS.TIME	BURN TIME SEC	STATUS	DLTAV FT/SEC.
6	11	17	1964	4	38	47.7	16727.7	34.4408	PLANNED	30.000

ORBIT ADJUST NO. 29

REV	DATE MO	DAY	YEAR	TIME HRS	MIN	SEC	SYS.TIME	BURN TIME SEC	STATUS	DLTAV FT/SEC.
7	11	17	1964	6	9	20.1	22160.1	26.2215	PLANNED	20.000

PLANNED (STATUS 0) ADJUSTS ARE IN THE OAJ.

1. TO ACCEPT THE OAJ TABLE AS IS, HIT START.

2. TO DELETE ALL PLANNED ADJUSTS, SET A=NON=ZRO AND HIT START.

Approved for Release: 2024/01/30 C05099027

DATA ACQUISITION MESSAGE

REV 1 LONG ASC NODE 27.24E

POGO CAPABILITY 7 MAX EL 13.5 DUR 365 SEC
3/10/65 21 HRS 10 MIN 25 SEC S TO N

RISE	76225	AZ	64.7	EL	.0	LAT	74.44N
TRAN	76258	AZ	60.9	EL	2.0	LAT	76.36N
NEAR	76430	AZ	1.8	EL	13.5	LAT	83.05N
TRAN	76590	AZ	301.4	EL	2.0	LAT	77.30N
SET	76619	AZ	297.2	EL	-.0	LAT	75.59N

KODI CAPABILITY 7 MAX EL 45.9 DUR 365 SEC
3/10/65 21 HRS 18 MIN 20 SEC N TO S

RISE	76700	AZ	17.7	EL	-.0	LAT	70.60N
TRAN	76729	AZ	18.9	EL	2.0	LAT	68.76N
NEAR	76904	AZ	101.9	EL	45.9	LAT	57.26N
TRAN	77065	AZ	185.4	EL	2.0	LAT	46.39N
SET	77092	AZ	186.6	EL	-.0	LAT	44.62N

HULA CAPABILITY 7 MAX EL 44.6 DUR 337 SEC
3/10/65 21 HRS 27 MIN 22 SEC N TO S

RISE	77242	AZ	4.7	EL	-.0	LAT	34.35N
TRAN	77269	AZ	3.7	EL	2.0	LAT	32.48N
NEAR	77425	AZ	281.3	EL	44.6	LAT	21.84N
TRAN	77579	AZ	198.7	EL	2.0	LAT	11.19N
SET	77607	AZ	197.6	EL	-.0	LAT	9.31N

REV 2 LONG ASC NODE 4.84E

POGO CAPABILITY 7 MAX EL 17.2 DUR 386 SEC
3/10/65 22 HRS 38 MIN 22 SEC S TO N

RISE	81515	AZ	90.5	EL	-.0	LAT	69.20N
TRAN	81547	AZ	87.4	EL	2.0	LAT	71.20N
NEAR	81731	AZ	23.3	EL	17.2	LAT	81.36N
TRAN	81901	AZ	317.8	EL	2.0	LAT	80.61N
SET	81930	AZ	314.5	EL	-.0	LAT	79.20N

```
READY PAPER TAPE IN READER. RESTART.

        0 DISCREPANCIES FOUND IN BLOCK JUST FINISHED     MESSAGE 101    BLOCK 1    WORD 38     FRAME 8/804

        0 DISCREPANCIES FOUND IN BLOCK JUST FINISHED     MESSAGE 101    BLOCK 2    WORD 34     FRAME 8/1360

        0 DISCREPANCIES FOUND IN BLOCK JUST FINISHED     MESSAGE 101    BLOCK 3    WORD 34     FRAME 8/1920

        0 DISCREPANCIES FOUND IN BLOCK JUST FINISHED     MESSAGE 101    BLOCK 4    WORD 35     FRAME 8/248

PAPER TAPE INPUT COMPLETED.

CHECKING COMPLETED.  THERE WERE 0 DISCREPANCIES BETWEEN MPES, CBL, AND PAPER TAPE.
```

PROGRAM 206 VEHICLE NO.9999 SERIAL NO. 0006 RUN NO. F0039x09

GTELIM

DELAY LINE COMMAND LIST

WRD CNT	MSG NO.	SYSTIME SEC	VEH TIME SEC	REV NO.	S T	GEOD LAT DEG MIN	LONGITUDE DEG MIN	D L	CMD NO.	DESCRIPTION OF COMMAND
1	101	44450.0	751.0	- .6		31 51S	130 08W	1	211	T-R2-S -C-BT-6R
3	101	44473.7	773.7	- .6		33 27S	130 25W	1	291	TIMER RESET
5	101	58699.1	14999.1	-3.3	x	80 47N	155 19W	1	286	CPA R1-15-16-25-YF PF RF
6	101	58257.6	14557.6	3.2	P	67 39N	16 31W	1	342	SU-IR+DIS1 24-AC+FS TO
7	101	58362.3	14662.3	3.2	P	74 28N	22 45W	1	343	SU-IR+24-AC+FS DIS2 TO
8	101	79828.9	36128.9	-7.3	X	85 11N	172 20E	1	482	32 000.1+00.0L14
9	101	79424.0	35724.0	7.2	P	62 35N	102 17W	1	327	R1-YLC PLC RLF RT-24-
10	101	79581.7	35881.7	7.2	P	72 57N	109 31W	1	352	PD SU-IR + 24-AC+FS TO
11	101	9155.6	51855.6	10.2	X	75 41N	179 28W	1	211	T-R2-S-C-BT-6R
12	101	8631.5	51331.5	10.1	K	40 53N	162 12W	1	286	CPA R1-15-16-25-YF PF RF
13	101	8741.0	51441.0	10.1	D	48 16N	163 54W	1	285	CPA R1-15-16-25+YF PF RF
14	101	41590.4	84290.4	-16.3	X	64 16N	105 24W	1	201	T+R2-S+C-BT+6R
15	101	41086.5	83786.5	16.2	P	80 10N	37 38E	1	291	TIMER RESET
16	101	41183.2	83883.2	16.2	P	84 46N	0 16W	1	211	T-R2-S-C-BT-6R
17	101	53080.7	95780.7	-18.5	X	5 36N	162 53W	1	286	CPA R1-15-16-25-YF PF RF
18	101	52566.5	95266.5	-18.4	H	40 21N	157 06W	1	285	CPA R1-15-16-25+YF PF RF
19	101	52659.6	95359.6	-18.4	H	34 05N	158 20W	1	201	T+R2-S+C-BT+6R
20	101	73108.3	115808.3	-22.3	X	84 28N	173 18E	1	211	T-R2-S-C-BT-6R

CHRONOLOGICAL COMMAND LIST

MSG NO.	SYSTIME SEC	VEH TIME SEC	REV NO.	S T	GEOD LAT DEG MIN	GEOD LAT DEG MIN	LONGITUDE DEG MIN	LONGITUDE DEG MIN	D L	CMD NO.	DESCRIPTION OF COMMAND
101	43700.3	.3	0						1	290	DUMMY
101	43700.3	.3	0						2	290	DUMMY
101	43700.3	.3	0						3	290	DUMMY
101	43700.3	.3	0						4	9	PPD OFF
0	44000.0	300.0	-.5		1	23S	125	22W	0	291	TIMER RESET
101	44450.0	750.0	-.6		31	51S	130	08W	1	211	T-R2-S-C-BT-6R
101	44473.7	773.7	-.6		33	27S	130	25W	1	286	CPA R1-15-16-25-YF PF RF
101	47798.6	4098.6	1.2P		78	09N	15	15E	2	237	T-R2-S-C+BT-6R
101	47909.3	4209.3	1.2P		84	07N	16	20W	2	211	T-R2-S-C-BT-6R
101	48683.9	4983.9	-1.4X		41	02N	140	35W	2	285	CPA R1-15-16-25+YF PF RF
101	53035.6	9335.6	2.2P		73	28N	0	36E	3	201	T+R2-S+C-BT+6R
101	53150.7	9450.7	2.2P	P	80	36N	13	57W	3	291	TIMER RESET
101	53959.7	10259.7	-2.4X	X	43	25N	162	13W	3	211	T-R2-S-C-BT-6R
101	54036.9	10336.9	-2.4H	H	38	13N	163	18W	4	286	CPA R1-15-16-25-YF PF RF
101	54143.9	10443.0	-2.4H	H	31	01N	164	39W	4	285	CPA R1-15-16-25+YF PF RF
101	54460.4	10760.4	-2.5X	X	9	37N	168	03W	4	201	T+R2-S+C-BT+6R
101	58257.6	14557.6	3.2P	P	67	39N	16	31W	1	291	TIMER RESET
101	58362.3	14662.3	3.2P	P	74	28N	22	45W	1	300	E1+E2+
101	58699.1	14999.1	-3.3X	X	80	47N	155	19W	1	340	SU-IR+24+AC+FS TO E-
101	63485.2	19785.2	4.2P	P	62	08N	35	39W	2	354	PTP SU-IR+24-AC+FS TO
101	63579.7	19879.7	4.2P	P	68	23N	39	09W	2	291	TIMER RESET

SVS 5312

SVS 5312

PROGRAM 206 VEH. NO. 9999 SERIAL NO. 0024 RUN NO. F0039x09

GTELIM PAGE 1

GTELIM

DATE 05/01/63 17980.0 PREDICTED VEHICLE STATUS REPORT LATEST TRANSMITTED MESSAGE 104

******SEPARATION EVENTS*******

SYSTEM TIME	COMPUTER PREARM	OCV-AGENA	DISC-ONNECT	SAFE ARM 3 & 4	H30 PREARM	H30 ARM	H30 TRANSF	H30 SEPAR
71980.0	Norm	Norm	Norm	Norm	Norm	Norm	Norm	Norm
71984.9	--	--	--	--	--	--	--	--
82320.1	--	--	--	--	--	--	--	--
82411.8	--	--	--	--	--	--	--	--
82823.1	--	--	--	--	--	--	--	--
1208.0	--	--	--	--	--	--	--	--
1305.9	--	--	--	--	--	--	--	--
1683.9	--	--	--	--	--	--	--	--
1890.0	--	--	--	--	--	--	--	--
1900.9	--	--	--	--	--	--	--	--
1910.9	--	--	ON	--	--	--	--	--
1914.9	--	--	--	FIRE	--	--	--	--
1954.8	--	--	--	--	--	--	--	--
2373.4	--	--	--	--	--	--	--	--
6483.9	--	--	--	--	--	--	--	--

SVS5312

DATE 05/01/63 45060.0 PREDICTED VEHICLE STATUS REPORT LATEST TRNASMITTED MESSAGE 102

*****TT+C+ELECTRIC POWER*******

SYSTEM TIME	TM ALTIME	TM MODE	TRANS-MITTER	RE-CORDER	VER-LORT	RATE BEACON	PPD	SECURE KEY	REG ULATOR
45050.0	OFF	--		OFF	OFF	OFF	OFF	8	NORM
45053.1	--	--	--	--	--	--	--	8	--
49763.1	ON	ORB	--	--	ON	ON	--	8	--
49874.6	--	--	--	--	--	--	ON	8	--
50391.4	OFF	--	--	--	OFF	OFF	OFF	9	--
54588.4	ON	--	--	--	ON	--	--	9	--
54681.2	--	--	--	--	--	--	ON	9	--
55100.1	OFF	--	--	--	OFF	--	OFF	10	--
55158.3	ON	--	--	--	ON	--	--	10	--
55275.8	--	--	--	--	--	--	ON	10	--
55590.3	OFF	--	--	--	OFF	--	OFF	11	--
71851.4	ON	--	--	PB	ON	--	--	11	--
71980.0	--	--	--	--	--	--	ON	11	--
72316.4	OFF	--	--	--	OFF	--	OFF	12	--
77177.3	ON	--	--	--	ON	--	--	12	--
77272.3	--	--	--	--	--	--	ON	12	--
78280.7	OFF	--	--	OFF	OFF	--	OFF	13	--
82494.6	ON	--	--	--	ON	--	--	13	--
82530.4	--	--	--	--	--	--	ON	13	--
83029.4	OFF	--	--	--	OFF	--	OFF	14	--

Approved for Release: 2024/01/30 C05099027

PROGRAM 206 VEHICLE NO. 9999 SERIAL NO. 0007 RUN NO. F0039x09

GTELIM

DATE 05/01/63 8560.0

PREDICTED VEHICLE STATUS REPORT LATEST TRANSMITTED MESSAGE GTELIM 101

******* ATTITUDE CONTROL ******

SYSTEM TIME	AC SYS POWER	AC PRESS	IR SIGNAL	R&P GYRO	YAW GYRO	RATE ROOFS	YAW LEVEL	PITCH LEVEL	ROLL LEVEL	YAW DB	PITCH DB	ROLL DB	FLY	PITCH POS	OCV SPIN
8560.0	OFF		OFF	CAGE	CAGE		HIGH			COARSE	COARSE	COARSE		DOWN	ON
8569.5	--	--	--	--	--	--	--	--	--	--	--	--	--	--	--
12937.1	--	--	--	--	--	--	--	--	--	--	--	FINE	--	--	--
13050.9	--	--	--	--	--	--	--	--	--	FINE	--	COARSE	--	--	--
13849.1	--	--	--	--	--	--	--	--	--	COARSE	--	--	--	--	--
13952.6	--	--	--	--	--	--	--	--	--	--	--	--	--	--	--
14067.4	--	--	--	--	--	--	--	--	--	--	FINE	--	--	--	--
14340.1	--	--	--	--	--	--	--	--	--	--	COARSE	--	--	--	--
18151.5	--	--	--	--	--	--	--	--	--	--	--	--	--	--	--
18265.6	--	--	--	--	--	--	--	--	--	--	--	--	--	--	--
18588.2	--	--	--	--	--	--	--	--	--	--	--	--	--	--	--
19182.3	--	--	--	--	--	ON	LOW	--	--	--	--	--	FWD	--	--
19182.6	ON	--	ON	--	--	--	--	--	--	--	--	--	--	--	--
19182.9	ON	--	ON	--	--	--	--	--	--	--	--	--	--	--	--
23270.3	ON	--	ON	UNCAGE	UNCAGE	--	--	--	--	--	--	--	--	--	OFF
28272.3	--	--	--	--	--	--	--	--	--	--	FINE	--	--	--	--
28279.3	--	--	--	--	--	OFF	--	--	--	--	--	--	--	--	--
28280.3	--	--	--	--	--	--	HIGH	--	--	--	--	--	--	--	--
28282.3	--	--	--	--	--	--	--	--	--	--	--	--	--	--	--

Approved for Release: 2024/01/30 C05099027

PROGRAM 206 VEH. NO. 9999 SERIAL NO. 0019 RUN NO. F0039x09

GTELIM

GTELIM

DATE 05/01/63 29170.0 PREDICTED VEHICLE STATUS REPORT LATEST TRANSMITTED MESSAGE 103

**********PROPULSION**********

SYSTEM TIME	OCV TANKS	ENGINE 1	ENGINE 2	ACCEL HEATER	VELOC-IMETER
82411.8	NORM	ON	ON	--	--
82823.1	--	--	--	NORM	--
1208.0	--	--	--	--	--
1305.9	--	--	--	--	--
1683.9	--	--	--	--	--
1890.0	--	--	--	--	--
1984.8	--	--	--	--	--
2373.4	--	--	--	--	--
8483.9	--	--	--	--	--
8594.3	--	--	--	--	--
7391.8	--	--	--	--	--
11738.3	--	--	--	--	--
11857.5	--	--	--	--	--
12671.7	--	--	--	--	--
12708.7	--	--	--	--	--
12802.5	--	--	--	--	--
13193.6	--	--	--	--	--
16973.9	--	--	--	--	--
17082.7	--	--	--	--	--
17416.4	--	--	--	--	--
22211.8	--	--	--	--	--
22307.8	--	--	--	--	--
22694.4	--	--	--	--	--

SVS 5312

Approved for Release: 2024/01/30 C05099027

PROGRAM 206 VEHICLE NO. 9999 SERIAL NO. 0014 RUN NO. F0000x09

GMPESCHN

TABLE NAME	RELATIVE LOC.	OLD CONTENTS	NEW CONTENTS-OCTAL	NEW CONTENTS-CONVERTED
OCVT	0	2014626206314631	2014626708314631	3255.0999999642

*GMPESCHN 9999 TAB2 84 273500008 77600000420000008 6,1 ,1 75.1

TABLE NAME	RELATIVE LOC.	OLD CONTENTS	NEW CONTENTS-OCTAL	NEW CONTENTS-CONVERTED
TAB2	84	0000000027350000	0000000027350000	27350000 (OCTAL)
TAB2	85	7600000420000000	7760000042000000	7760000042000000 (OCTAL)
TAB2	86	2003606314631463	2003606314631463	6.1000000000
TAB2	87	1774631463146314	1774631463146314	.1000000000
TAB2	88	2007454314631463	2007454314631463	75.0999999996

*GMPESCHN 9999 TAB2 6 2796. 2838.

TABLE NAME	RELATIVE LOC.	OLD CONTENS	NEW CONTENTS-OCTAL	NEW CONTENTS-CONVERTED
TAB2	6	2015412363146314	2014535400000000	2796.00000000000
TAB2	7	2014547500000000	2014547500000000	2838.00000000000

*GMPESCHN 9999 COMTAB3 104

TABLE NAME	RELATIVE LOC.	OLD CONTENTS	NEW CONTENTS-OCTAL	NEW CONTENTS- CONVERTED
COMTAB3	0	0000000000000143	0000000000000150	104

*GMPESCHN 9999 COMTAB3 595 348 47642022244071518 40020440616360668

TABLE NAME	RELATIVE LOC.	OLD CONTENTS	NEW CONTENTS-OCTAL	NEW CONTENTS-CONVERTED
COMTAB3	595	0000000000000000	0000000000000534	348
COMTAB3	596	0000000000000000	4764262224407151	PO SU-IR
COMTAB3	597	0000000000000000	4002044061636066	-24-AC+F

*GMPESCHN 9999 COMTAB3 598 222023462020208 148 00041010000018

TABLE NAME	RELATIVE LOC.	OLD CONTENTS	NEW CONTENTS-OCTAL	NEW CONTENTS-CONVERTED
COMTAB3	598	0000000000000000	2240234620202020	S TO
COMTAB3	599	0000000000000000	0000000000000014	14 (OCTAL)
COMTAB3	600	0000000000000000	0000004101000001	4101000001 (OCTAL)

Approved for Release: 2024/01/30 C05099027

SECURITY CLASSIFICATION-UNCLASSIFIED

DENSITYN TABLE DENSITIS+SOUND SPEED AT KNOWN ALTITUDES S-N

	MPES WORD DESCRIPTION *****MEMORY LOC.	ABS.	REL.	** CONTENTS (OCTAL)**	********** CONVERTED
	NO. DENSITIES SOUND SPEEDS	20320	0	0000000000000000	24
	DENSITY AT KNOWN ALTITUDE	20371	1	2023606500000000	400000.00000000
	DENSITY AT KNOWN ALTITUDE	20372	2	2023563060000000	300000.00000000
	DENSITY AT KNOWN ALTITUDE	20373	3	2023514020000000	340000.00000000
	DENSITY AT KNOWN ALTITUDE	20374	4	2023440265400000	295275.00000000
	DENSITY AT KNOWN ALTITUDE	20375	5	2023420570400000	279281.00000000
	DENSITY AT KNOWN ALTITUDE	20376	6	2023400227400000	262447.00000000
	DENSITY AT KNOWN ALTITUDE	20377	7	2022737613000000	245643.00000000
	DENSITY AT KNOWN ALTITUDE	20400	8	2022705426000000	232214.00000000
ZERO FM 24 THRU 24	SOUND SPEED AT ABOVE ALTITUDE	20401	9	1734462351322341	.000000000002
	SOUND SPEED AT ABOVE ALTITUDE	20402	10	1735726247361547	.000000000005
	SOUND SPEED AT ABOVE ALTITUDE	20403	11	1741425454327330	.000000000050
	SOUND SPEED AT ABOVE ALTITUDE	20404	12	1744652705243424	.000000000621
	SOUND SPEED AT ABOVE ALTITUDE	20405	13	1746405514376246	.000000001423
	SOUND SPEED AT ABOVE ALTITUDE	20406	14	1747520637316543	.000000003921
	SOUND SPEED AT ABOVE ALTITUDE	20407	15	1750573147606614	.000000000029
	SOUND SPEED AT ABOVE ALTITUDE	20410	16	1751533710704350	.000000016200

SVS 5312

Approved for Release: 2024/01/30 C05099027

PROGRAM 206 VEHICLE NO. 9999 SERIAL NO. 0019 RUN NO. F0041x09

GTERMIN PAGE 7

GTERMIN

SYS. TIME SECS.	UNIV. TIME MO/DA/YR	ALTITUDE FEET	GEOD. LAT DEGREES	LONGITUDE DEGREES	LOC. AZM. DEGREES	LOC GAM. DEGREES	DRAG LBS.	LOC. VEL FT/SEC	MACH NO.	DYN. PRES.	ACCEL.
PARAMETERS AT START OF RETRO-FIRE											
50387.96	8/17/63	817244.	63.9212	17.7602	347.4607	-.11110	0	25602.7	0	0	-.0342
PARAMETERS AT THE END OF RETRO-FIRE - OCV											
50743.31	8/17/63	726981.	84.8382	-42.4589	291.1695	-1.16003	0	25582.8	0	0	-.0358
PARAMETERS AT TOP OF ATMOSPHERE (4000,000 FEET)											
51291.56	8/17/63	409999.	54.2314	-149.4033	190.2520	-1.25606	64.59	25952.6	30.6588	1.39	-.0192
PARAMETERS AT IMPACT POINT											
51889.67	8/17/63	15800.	22.9598	-155.9414	184.8583	-88.17637	3737.57	454.9	.4302	154.80	-1.1138
OR											
PARAMETERS AT START OF RETRO-FIRE											
76981.50	7/8/64	526387.	52.4782	-156.4683	187.1245	-.30111	0	25876.0	0	0	-3.1559
PARAMETER AT THE END OF RETRO-FIRE - RV											
76989.86	7/8/64	521879.	51.9083	-156.5827	186.9314	-2.15203	0	25557.4	0	0	-3.5050
PARAMETERS AT TOP OF ATMOSPHERE (400,000 FEET)											
77103.58	7/8/64	410000.	49.1543	-157.9540	186.5921	-2.24212	.07	25692.3	29.2007	.01	-.0002
PARAMETERS AT FIRST 3 G POINT											
77312.25	7/8/64	195691.	29.8520	-159.9811	186.3571	-2.64672	877.79	23182.7	22.0627	191.24	-3.0000
PARAMETERS AT SECOND 3 G POINT START COUNT FOR CHUTE											
77419.54	7/8/64	79748.	26.0945	-160.4539	186.9447	-23.04548	872.94	2070.3	2.1360	188.34	-3.0000
PARAMETERS WHEN DROGUE CHUTE DEPLOYED											
77453.54	7/8/64	53715.	26.0043	-160.4651	186.3274	-60.28166	306.59	900.6	.9303	123.56	-1.0560
PARAMETERS WHEN MAIN CHUTE DEPLOYED											
77467.54	7/8/64	47313.	25.9972	-160.4660	186.0760	-78.45152	396.45	352.1	.3637	25.65	-1.1934
PARAMETERS WHEN 1.1-G POINT REACHED											
77470.52	7/8/64	47025.	25.9971	-160.4660	185.8977	-86.30153	319.35	62.3	.0644	.81	-1.1000
PARAMETERS AT IMPACT POINT											
77507.71	7/8/64	45000.	25.9967	-160.4660	185.8977	-86.30153	319.35	59.7	.0617	.81	-1.1000

Approved for Release: 2024/01/30 C05099027

GTPOT

```
  TEAPOT PREDICTION

* PRIMARY  XX        PRIMARY  XX

  IMPACT
  TIME     XX        XX   XX.XZ
  LAT      XX        XX.X S
  LONG     XXX       XX.X E

  CROSSING XX.XXN LAT
  TIME     XX        XX   XX.XZ
  LONG     XX        XX.X E

  EQUATOR CROSSING
  TIME     XX        XX   XX.XZ
  LONG     XXX       XX.X E

  CROSSING XX.XXS LAT
  TIME     XX        XX   XX.XZ
  LONG     XXX       XX.X E
```

* ALTERNATE XX or PRIMARY XX will be printed as designated by function card option B. The XX represents rev. number during which impact occurs.

The units of the output are:

Time is in hours, minutes, and seconds, Zulu (GMT).
Latitude is in degrees and minutes, North and South.
Longitude is in degrees and minutes, East or West of Greenwich.

GCHAP

Line 1	Orbit Adjust No. XX			
Line 2	Tau Vector			
Line 3	Vehicle No. XXXX	Run No. XXXX		
Line 4	Time of vector GCT XX/XX XH XXM XX.XS		System Time XXXXX.X	Rev No. X.X
Line 5	Time of epoch GCT XX/XX XH XXM XX.XS		System Time XXXXX.X	Epoch Rev No. X.X

Lines 6 through 13 consist of four blocks of data based on the orbit adjust at the start time of burn.

BLOCK 1

Line 6	RAD	(FT)	XXXXXXXX.XX
7	GEOC. LAT	(DEG N)	XXD X.XM
8	LONG	(DEG E)	XXD XX.XM
9	VEL	(FT/SEC)	XXXXX.XX
10	AZM	(DEG)	XXXD XX.XM
11	FPA	(DEG)	XXD .XM
12	HGT	(FT)	XXXXXX.XX
13	PERIOD	(MIN)	XX.XX

BLOCK 2

Line 6	ECCEN		.XXXXXXXXX
7	INCL	(DEG)	XXD XX.XM
8	BETA	(DEG)	XXXD XX.XM
9	DECAY	(SEC/DAY)	-.XX
10	C		.XXXXXXXXX
11	B	(FT2/SLUG)	X.XXXXXXXX
12	LIFE	(REVS)	XXXXX.XX
13	WGT		XX.XX

BLOCK 3

Line 6	PERIGEE		
7	GCT	XX/XX XH XXM	XX.XS
8	SYS.TIME		XXXXX.X
9	GEOD.LAT	(DEG N)	XXD XX.XM
10	HGT	(NM)	XXX.XX
11	REV		X.X

BLOCK 4

Line 6	APOGEE		
7	GCT	X/X XH XXM	XX.XS
8	SYS.TIME		XXXXX.X
9	GEOD.LAT	(DEG S)	XXD XX.XM
10	HGT	(NM)	XXX.XX
11	REV		X.X

Lines 14 through 25 repeat the same information for the orbit after adjust at the time of end of burn.

Line 26: DELTA V XX.X FPS DELTA T XX.XXX SEC

Line 27: Weight before adjust XXXX.XX LBS Weight after adjust XXXX.XX LBS

PROGRAM 206 VEHICLE NO. 9999 SERIAL NO. 0110 RUN NO. F0036x09

GBUSS

GBUSS

GBUSS REAL TIME MODE

GBUSS REENTRY PREDICTION

SVS 5312

B U S S A C T I V A T I O N

GEOMAGNETIC VECTOR

MODE	STATION	DATE	SYSTEM TIME	REV. NO.	RETRO LAT DEG	RETRO LAT MIN	RETRO SYSTEM TIME	IMPACT LAT DEG	IMPACT LAT MIN	IMPACT LONG DEG	IMPACT LONG MIN	FIELD STRENGTH MG	INCLINATION (PITCH) DEG	DECLINATION (YAW) DEG
REAL TIME	KODI	8/29/63	72519.8	-17.	58	29	72624.9	23	59.	-149	4.	515.1	73.65	197.92
NEXT ORBIT	KODI	8/29/63	67269.3	-16.										

Approved for Release: 2024/01/30 C05099027

PROGRAM 206 VEHICLE NO. 9999 SERIAL NO: 0015 RUN NO.N0000x09

GBUSS TELEMETRY PREDICTION

GBUSS

INPUT ATTITUDE 0 DEGS ROLL 0 DEGS YAW 0 DEGS PITCH

GEOMAGNETIC VECTOR

SYSTEM TIME	STATION	REV. NO.	LINK 3 P PCT BW	CHN 7 MG	LINK 3 Q PCT BW	CHN 8 MG	LINK 3 R PCT BW	CHN 9 MG	FIELD STRENGTH MG	INCLINATION DEG	DECLINATION DEG
72438.5	KODI	-17.	85.	355.5	82.	-394.4	44.	-58.7	534.3	82.93	204.73
72468.5	KODI	-17.	85.	351.7	81.	-395.9	43.	-70.9	534.3	81.54	203.42
72498.5	KODI	-17.	85.	347.1	81.	-396.1	42.	-83.6	533.2	80.10	202.20
72528.5	KODI	-17.	85.	341.6	81.	-394.9	41.	-96.5	531.0	78.61	201.00
72558.5	KODI	-17.	85.	335.2	80.	-392.2	40.	-109.4	527.5	77.08	199.99
72588.5	KODI	-17.	85.	328.0	79.	-388.1	38.	-122.0	522.6	75.54	199.00
72618.5	KODI	-17.	84.	320.0	79.	-382.7	37.	-134.1	516.6	73.98	198.10
72648.5	KODI	-17.	84.	311.4	78.	-376.0	36.	-145.4	509.4	72.43	197.29
72678.5	KODI	-17.	83.	302.3	77.	-368.4	35.	-155.9	501.4	70.89	196.55
72708.5	KODI	-17.	82.	292.8	76.	-360.0	34.	-165.5	492.7	69.37	195.89
72738.5	KODI	-17.	81.	283.2	75.	-351.1	34.	-174.4	483.6	67.86	195.27
72768.5	KODI	-17.	81.	273.5	74.	-341.7	33.	-182.6	474.2	66.35	194.68
72798.5	KODI	-17.	80.	263.8	73.	-331.9	32.	-190.4	464.8	64.82	194.11
72828.5	KODI	-17.	79.	254.0	73.	-321.8	32.	-197.9	455.3	63.25	193.53
72845.5	KODI	-17.	78.	248.5	72.	-315.9	31.	-202.1	449.9	62.33	193.19

Approved for Release: 2024/01/30 C05099027

GCOAT

Line 1			C O A T		
Lines 2, 3 (blank)					
Line 4	REV	DATE	GMT	SYSTIME	DELTA V
Line 5		MO/DA/YR	HRS MIN SEC	SEC	FT/SEC.
Line 6 (blank)					
Lines 7, 9 etc.	X.X	XX/XX/XX	XX XX XX.	XXXXX.	XX.XX
Lines 8, 10 etc. (blank)					

If more than one page is used, line 1 of the subsequent pages appears as follows:

Line 1 COAT (Page X)

Following the last entry in the COAT is the printout:

END OF COAT

If the COAT is full (i.e., it contains sixty-four entries), the following is printed out after the last entry:

TABLE IS FULL

END OF COAT

GALOOT

Rev No. XXX MO/DY/YR XX/XX/XX HR/MN/SC XX/XX/XXXX

Time of Validity T
Angular Travel at T
Rev Bias (fixed point)
Time of Ascending Node
Semi-major Axis
Eccentricity
Angle of inclination of orbital plane
Set no. (fixed point)
Right ascension of ascending node
eo sin wpo
eo cos wpo
Linear decay coefficient of semi-major axis
Quadratic decay coefficient of semi-major axis
Linear decay coefficient of eccentricity
Linear decay coefficient of precession of perigee
Linear decay coefficient of regression of node
Argument of perigee
Semi-latus rectum
B factor

GTORBEL

TORBEL ELEMENTS

OPSNUM	XXXX		FIXED
RUNNUM	XXXXXXXX		BCD
RBIAS	XX		
MONTH	XX		
DAY	XX		
CTO	.XXXXXXX	±XX	SECS
CAO	.XXXXXXX	±XX	FEET
CEO	.XXXXXXX	±XX	
CI	.XXXXXXX	±XX	DEG
COMEGO	.XXXXXXX	±XX	DEG
D ONE	.XXXXXXX	±XX	
D TWO	.XXXXXXX	±XX	
D THREE	.XXXXXXX	±XX	
CK ONE	.XXXXXXX	±XX	
CK TWO	.XXXXXXX	±XX	
CWPO	.XXXXXXX	±XX	DEG
OMGG	.XXXXXXX	±XX	DEG

Or

BREAKWELL ELEMENTS

OPSNUM	XXXX		FIXED
RUNNUM	XXXXXXXX		BCD
AZERO	.XXXXXXX	±XX	FEET
BETAO	.XXXXXXX	±XX	DEG
ECCENO	.XXXXXXX	±XX	
C DECAY	.XXXXXXX	±XX	
INCLO	.XXXXXXX	±XX	DEG
RT ASC	.XXXXXXX	±XX	DEG
TOMEGAO	.XXXXXXX	±XX	SECS
EPOCHMON	XX		
EPOCHDAY	XX		
EPOCHREV	XX.		

The geoposition information is printed 49 lines per page exclusive of headers in the following format

TIME SEC	GEOD DEG	LAT MIN	LONGITUDE DEG	MIN
REV			XX	
XXXXX.X	0	ON	XXX	XX.XE
XXXXX.X	XX	XX.XN	XXX	XX.XE
.				
.				
.				
REV			XX	
XXXXX.X	0	ON	XXX	XX.XE
XXXXX.X	XX	XX.XN	XXX	XX.XE
.				

SVS 5312

PROGRAM 206 VEHICLE NO. 9999 SERIAL NO. 0010 RUN NO. F0033x09

GCOMMAND

GCOMMAND

STATION BOSS REV NO 22 DATE 1/5/62 MSG NO 0

ASSEMBLED COMMAND LIST

ORDER NO	COMMAND NO	DESCRIPTION OF COMMAND	REV NO	SEQUENCE NO	PASS NO	SYSTEM TIME SEC	VEHICLE TIME SEC
056.0	211	T-R2-S-C-BT-6R	34	108	5	52026.8	181126.8
057.0	291	TIMER RESET	34	108	5	51513.1	180613.1
060.0	289	CPA R1-15-16-25-YC PC RC	34	108	5	51605.7	180705.7
061.0	367	PZ SU-IR+24-AC+FS TO	35	108	7	56753.8	185853.8
062.0	368	PZ SU-IR-24-AC+FS TO	35	108	7	55805.5	184905.5
063.0	211	T-R2-S-C-BT-6R	35	108	7	55915.6	185015.6
064.0	289	CPA R1-15-16-25-YC PC RC	36	108	1	61591.5	190691.5
065.0	288	CPA R1-15-16-25+YC PC RC	36	108	1	61072.5	190172.5
066.0	201	T2+R2-S+ C-BT+6R	36	108	1	61172.5	190272.5
067.0	291	TIMER RESET	37	108	1	66910.3	196010.3
070.0	213	T+R2-S+C+BT+6R	37	108	1	66360.6	195460.6
071.0	211	T-R2-S-C-BT-6R	37	108	1	66454.8	195554.8
072.0	289	CPA R1-15-16-25-YC PC RC	38	108	7	72235.9	201335.9
073.0	288	CPA R1-15-16-25+YC PC RC	38	108	7	71213.5	200313.5
074.0	203	T+R2+S+C-BT+6R	38	108	7	71311.2	200411.2
075.0	211	T-R2-S-C-BT-6R	39	108	1	77019.4	206119.4
076.0	289	CPA R1-15-16-25-YC PC RC	39	108	1	76594.7	205694.7
077.0	288	CPA R1-15-16-25+YC PC RC	39	108	1	76752.6	205852.6

Approved for Release: 2024/01/30 C05099027

PROGRAM 206 VEHICLE NO. 9999 SERIAL NO. 0010 RUN NO. F0033x09

GCOMMAND

GCOMMAND

REV NO 22 DATE 1/5/62 MSG NO 0

CHRONOLOGICAL COMMAND LIST

ORDER NO	SYS TIME SEC	VEH TIME SEC	REV NO	S T	GEOD DEG	LAT MIN	LONGITUDE DEG	MIN	D L	SEQ NO	PASS NO	COMM NO	DESCRIPTION OF COMMAND
001.0	72589.4	115289.4	22.2	B	57	27N	72	16W	1	108	1	213	T+R2-S+C+BT+6R
011.0	72628.0	115328.0	22.2	P	60	02N	73	14W	3	108	2	211	T-R2-S-C-BT-6R
012.0	72722.9	115422.9	22.3	P	66	20N	76	19W	3	108	2	289	CPA R1-15-16-25-YC PC RC
010.0	73078.3	115778.3	-22.3	P	85	08N	165	28W	3	108	2	288	CPA R1-15-16-25+YC PC RC
014.0	77977.0	120677.0	23.2	P	62	44N	96	33W	4	108	1	201	T+R2-S+C-BT+6R
015.0	78099.8	120799.8	23.2	P	70	50N	101	40W	4	108	1	213	T+R2-S+C+BT+6R
013.0	78363.1	121063.1	23.2	P	85	07N	168	45W	4	108	1	211	T-R2-S-C-BT-6R
017.0	82682.0	125382.0	24.1	C	22	04N	108	43W	1	108	7	289	CPA R1-15-16-25-YC PC RC
020.0	82791.3	125491.3	24.1	C	29	30N	109	57W	1	108	7	288	CPA R1-15-16-25+YC PC RC
016.0	83391.1	126091.1	24.2	A	69	43N	122	53W	1	108	7	201	T+R2-S-C-BT+6R
022.0	1822.1	130922.1	25.1	A	37	49N	133	37W	2	108	7	211	T-R2-S-C-BT-6R
023.0	1915.1	131015.1	25.1	A	44	06N	134	56W	2	108	7	289	CPA R1-15-16-25-YC PC RC
021.0	2447.3	131547.3	25.2	D	79	09N	158	30W	2	108	7	288	CPA R1-15-16-25+YC PC RC
002.0	3494.2	132594.2	-25.4		29	01N	45	50E	2	141	0	201	T+R2-S+C-BT+6R
003.0	3496.2	132596.2	-25.4		28	53N	45	49E	2	141	0	213	T+R2-S+C+BT+6R
004.0	3503.2	132683.2	-25.4		28	24N	45	44E	2	141	0	211	T-R2-S-BT-6R
005.0	3504.2	132684.2	-25.4		28	20N	45	43E	2	141	0	289	CPA R1-15-16-25-YC PC RC
006.0	3579.3	132679.3	-25.4		23	15N	44	54E	2	141	0	288	CPA R1-15-16-25+YC PC RC
007.0	3580.3	132688.3	-25.4		23	11N	44	53E	2	141	0	201	T+R2-S+C-BT+6R

SVS 5312

Approved for Release: 2024/01/30 C05099027

PROGRAM 206 VEHICLE NO. 9999 SERIAL NO. 0003 RUN NO. F0033x09

GCOMMAND

GCOMMAND

STATION COOK REV NO. 0 DATE 1/5/62 MSG NO 101

COMMAND BLOCK LIST

BLOCK NO 2
DELAY LINE NO 2

ORDER NO	VEH TIME SEC	COMMAND NO	COMMAND DESCRIPTION	WORD NO	S T	REV NO
000.0		2	SELECT LINE 2	1	H	26
000.0		201	ERASE	2	H	26
003.0	4983.9	211	T-R2-S-C-BT-6R	3	H	26
004.0	4098.6	291	TIMER RESET	4	P	29
005.0	4209.3	289	CPA R1-15-16-25-YC PC RC	5	P	29
017.0	20274.2	211	T-R2-S-C-BT-6R	6	P	29
020.0	19785.2	289	CPA R1-15-16-25-YC PC RC	7	P	29
021.0	19879.7	288	CPA R1-15-16-25+ YC PC RC	8	P	29
033.0	41310.7	203	T+R2+S+C-BT+6R	9	B	30
034.0	40369.4	217	T+R2+S+C+BT+6R	10	B	30
035.0	40461.2	211	T-R2-S-C-BT-6R	11	B	30
047.0	68382.2	289	CPA R1-15-16-25-YC PC RC	12	B	30
050.0	67944.1	288	CPA R1-15-16-25+YC PC RC	13	B	30
051.0	68069.1	203	T+R2+S+C-BT+6R	14	C	32
063.0	84970.8	217	T+R2+S+C+BT+6R	15	C	32
064.0	84476.3	211	T-R2-S-C-BT-6R	16	C	32
065.0	84575.9	289	CPA R1-15-16-25-YC PC RC	17	C	32
077.0	100338.6	288	CPA R1-15-16-25+YC PC RC	18	C	32
100.0	99524.9	201	T+R2-S+C-BT+6R	19	K	34