Approved for Release: 2024/06/10 C05026032

~~SECRET~~ - HANDLE VIA BYEMAN CONTROL SYSTEM ONLY
(When filled in)

NRL B-033-68

DATE: basic letter undated

ORIGINATOR	SERIAL NO.	ENCLOSURES
CO U.S. NAVSECGRPACT [redacted] Rec. via BRINDLE-HSG (HAMMERSTROM)	BYE 57856-68 (ser 6015)	(1) Subject report (2 copies of all) - Report consist of material as listed below: D029-D039

DATE REC'D IN NRL	COPIES REC'D	COPY NOS.	RECEIPT NUMBER
7-31-68	one	--	SPO/100-68

SUBJECT: Recommendations on Equipment Specification by CTO Paul L. LENKER, USN

ROUTE TO	*	COPY NO.	WITH ENCLS.	SIGNATURE	DATE OUT	DATE RETURNED	ROUTE TO	*	COPY NO.	WITH ENCLS.	SIGNATURE	DATE OUT	DATE RETURNED
(as logged) 5614 (Helterich)													

Cover letter from CTO P. L. LENKER of 18 [illegible] with enclosures as follows:

(1) BTM-9 Cabinet Changes (1 page)
(2) Schematic-Reel Servo Supply-Ampex Drawing No. 3114196 (1 page)
(3) Modified Ampex Drawing No. 3227975, sheets 1 and 12 (2 pages)
(4) Listings of Mag Tape Pre-edit Test Program (Page)
(5) Modified List Mag Tape Output 1 (2 pages)
(6) Modified List Mag Tape Output 2 (1 page)
(7) [illegible] (1 tape)
(8) Modified List Mag Tape Output 3 (2 pages)
(9) QC Log Before Edit (1 page)
(10) Modified List Mag Tape Output 4 (3 pages)
(11) QC Logger After Edit (1 page)

Chief Lenker's ltr in TM-9

NRL INCOMING DOCUMENT
B033-68
1
BYE-57856-68

RETURN THIS ROUTE SLIP TO NRL SPECIAL PROJECTS OFFICE, ROOM 222, BLDG. 43.
DO NOT ROUTE TO OTHER SECTION OR BRANCH.

* SYMBOL	ACTION TAKEN BY	DESTRUCTION REPORT NO.	FINISHED FILE
A-ACTION C-COMMENT I-INFORMATION R-RETAIN COPY E-EVALUATION			

NRL CONTROL RECORD NDW-NRL-5216/1005 (11-67)

~~SECRET~~ - HANDLE IVA BYEMAN CONTROL SYSTEM ONLY
(When filled in)

B-0038-68 PAGE 1 OF 1 PAGES

PAGE 1 OF 1 PAGES ENCLOSURE (1)

Approved for Release: 2024/06/10 C05026032

C05026032

~~S E C R E T~~

Approved for Release: 2024/06/10 C05026032

BYE-57856-68

HANDLE VIA BYEMAN
CONTROL SYSTEM
PROJECT EARPOP

U. S. NAVAL SECURITY GROUP ACTIVITY
BOX 1
FPO NEW YORK 09514

IN REPLY REFER TO:
Ser 0015

~~SECRET~~

From: Commanding Officer, U. S. Naval Security Group Activity
To: Naval Research Laboratory, Code 5600
Attention: Mr. Fred V. HELLRICH

Subj: Recommendations on Equipment Specification by CTC Paul L. LENKER, USN

Encl: (1) Subject Report

1. Reviewed and forwarded.

2. Chief LENKER's recommendations on hardware modifications appear to be well thought out and adequately detailed. His desires for maintenance time saving and greater trouble shooting capability have my support.

3. Chief LENKER's erase modification is especially interesting. A program will be written shortly by station personnel to give operators the capability to edit bad headers and trailers. He has shown that it can be done. The goal in FM recording has always been 100% processible tapes. When monthly reports were being sent to the field by NAVSECGRU Headquarters, it was gratifying to note that frequently approached 100%. During the past four months digital recordings of 34 passes were sent to NSA with the knowledge that they could not be processed due to operator error or equipment failure. With an edit capability, 29 of these passes could have been recovered. That puts us very close to 100% on the digital recordings, which is where we want to be.

4. An extra copy of Chief LENKER's report is included for forwarding to HRB-SINGER project personnel, if desired.

Acting

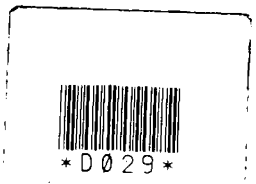

~~S E C R E T~~

HANDLE VIA BYEMAN
CONTROL SYSTEM
PROJECT EARPOP

~~SECRET~~

318 NRL B-0033-68 PAGE 1 OF 1 PAGES

Approved for Release: 2024/06/10 C05026032

C05026032
SECRET
Approved for Release: 2024/06/10 C05026032

HANDLE VIA BYEMAN
CONTROL SYSTEM
PROJECT EARPOP

BYE-57856-68

18 July 1968
Ser 0015

MEMORANDUM

From: CTC P. L. LENKER, U. S. NSGA
To: Mr. Fred V. HELLRICH, 5614B
Via: (1) Commanding Officer,

Subj: Recommendations on Specifications for the New Buffered-Tape Data Storage System

Ref: (a) 91347-S-1, Summary Report Conclusions and Procurement Specifications for Buffered-Tape Data Storage System; HRB-Singer Inc; 26 January 1968
(b) Technical Manual for TM-9 Tape Transport; Ampex Corporation; March 1966

Encl: (1) BTM-9 Cabinet Changes
(2) Schematic-Reel Servo Supply-Ampex Drawing No. 3114196
(3) Modified Ampex Drawing No. 3227975, sheets 1 and 12
(4) Listings of Mag Tape Pre-edit Test Program
(5) Modified List Mag Tape Output 1
(6) Modified List Mag Tape Output 2
(7) Paper Tape object of MT Pre-edit Test Program
(8) Modified List Mag Tape Output 3
(9) QC Log Before Edit
(10) Modified List Mag Tape Output 4
(11) QC Log After Edit

D030

1. From the maintenance standpoint, the present BTM-9 is extremely difficult to work on. As examples:

a. To replace an SCR or other component in the Reel Servo Electronics, it is necessary to remove the whole top of the RFI Cabinet.

b. To scope points of the Capstan Servo Amplifier, it is necessary to remove all cabling from the Capstan Servo Amp./Power Supply Unit, remove the unit from the cabinet to take off it's rear shield, reinstall the unit and cabling, and, finally, crawl through the front of the cabinet to insert the scope probe.

In view of the inaccessability of the Reel Servo Electronics, I recommend that the TM-9 transport be placed on a hinge as shown in encl. (1). This not only provides accessability to the reel servo electronics, but it will make tape guide replacement and capstan motor removal a one man job instead of a two man job. Also greater accessability would be provided to the transport control circuits, reel motors, and vacuum pump. In view of the time and work involved in placing a scope probe on inaccessable circuits, I recommend that all cable lengths be increased on the unhinged units within the cabinet. The increase in length should be sufficient to allow the units to be removed from their rack and worked on without disconnecting their cables. This recommendation applies specifically to the following units:

NRL B-33-68

SECRET
HANDLE VIA BYEMAN
CONTROL SYSTEM
PROJECT EARPOP

Approved for Release: 2024/06/10 C05026032

C05026032 SECRET Approved for Release: 2024/06/10 C05026032

b. Magnetic Core Memory

b. Power Supply for a. above

c. Blower Assembly for a. above

d. Capstan Servo Amplifier/Power Supply

2. As an additional maintenance trouble shooting aid, the "Remote Modes of Operation" should be modified to allow an all "1" bit data stream to be generated. This would provide a worst case test for the Magnetic Tape Read/Write circuits. Presently the only track that gets a worst case test is the Parity track. Since the present modes of operation should be retained, perhaps a switch could be added to allow the existing test to be performed in one position, and in the opposite position, an all "0" or "1" bit data stream for each track depending on the position of the existing switches. (see ref. (2), "Specifications" section, page 3, paragraph 3.1.1.1.1 (b) and (c)) Also we lack proper documentation on the Reel Servo Electronics and the Capstan Servo Power Amplifier as follows:

a. In the Reel Servo Electronics, there are additional transistor circuits to control the voltage that their respective SCR's fire. With this additional circuitry, the SCR can fire only at the null of the power supply voltage. Compare drawing No. 3114196 in ref (b) with enclosure (2). On the enclosure's right side, I have drawn as much of the transistor circuitry that I could trace out for one SCR. There are four of these circuits in our machine.

b. The original Capstan Servo Assembly that came with our machine has an additional potentiometer located on the Capstan Servo Power Amplifier Circuit Board Assembly. Our drawing for this assy. does not show this pot., nor does the manual tell you how to adjust it. (see drawing No.3114239 in ref (b)) Also the new Capstan Servo Assembly that you sent as a spare has two additional diodes associated with this same board.

c. I need new schematics for Assemblies indicated above and additional adjustment procedures involving the pot mentioned above.

3. From the standpoint of operational errors, quality control checks made by use of the computer have shown the following: 5.6 percent of 603 tasks during April 68 to July 68 would be unusable beyond this field site. These errors were erroneous entries in header-trailer records, missing header-trailer records, missing EOF's after calibration records, and double EOF's between tasks. In view of these errors, a way should be provided to allow bad header and trailer records to be replaced. If a method such as the one discussed below was provided, 85.3 percent of the unusable tasks could have been salvaged.

4. To meet our present requirements for editing, any method adopted should not require a new processing program at NSA or any additional operator intervention during recording. To be able to edit a BTM-9 tape with the

Approved for Release: 2024/06/10 C05026032

C05026032 SECRET Approved for Release: 2024/06/10 C05026032

computer system the following criteria must be met:

a. A gap of erased tape 3 to 5 inches long must be obtained between the header/trailer and the EOF, or generate this gap after the EOF. This is because the normal IRG on the BTM-9 tape is 3/4 inch; and if a header/trailer was replaced, the EOF would be erased because the erase head on the TM-11 is 3/4 inch ahead of the write. Since the SEL TCU is hard-wired to put this gap before an EOF, the best place for the gap on the BTM-9 tape would be between the header/trailer and the EOF. The main advantage to this placement would be that the same basic program could be used to edit a BTM-9 tape or an SEL tape. However, without spare gates to put the gap before the EOF, I was able to obtain an erased gap after the EOF. This gap is generated by firing the 70ms.SS (A1-12-2) 300 ms. after clearing the start FF. The circuit modifications that I have made to acquire this gap are shown in enclosure (3) (a spare SS A1-5-5 is now used). A 300 ms. delay in firing the 70 ms. SS will permit the following to occur before erasing 4 inches of tape:

1. The last record to be written from core

2. The normal EOF to be written

3. The transport time to stabilize.

b. All transports must be compatible;i.e., all write circuit wiring in the TM-11's and the BTM-9 must be such that all erase heads saturate the domains on tape in the same direction. Also the write heads must saturate the domains in the same direction as the erase head when the write flip-flops are in the reset state. As a compatibility test, editing of a tape made by the new Buffered-Tape Storage System should be a part of the acceptance tests. In fact, all transports in our computer systems should be checked for this compatibility. The primary reason being, if NSA wanted us to edit a header or trailer for them, the tape would have to be sent back here. This is because we don't know whether our transports are compatible with HRB's. And on the assumption that their transports are not compatible with ours, the data tape would be lost by HRB's editing because two parity error frames would be generated as follows:

1. Bringing up write current in the write heads would generate one frame of "1" bits approximately 3/8 inch ahead of the new record that is written. Then when the tape is read, this one frame would be read as a "1" bit 1 frame record having a longitudinal parity error. The transport would stop tape with the new record setting right over the read head. When the next read command is given, only a part of the record could be retreived because tape is not up to speed during the first part of the record. Since only part of the data record would be retreived, another longitudinal parity error would occur.

2. Turning off the erase head would generate another "1" bit 1 frame record without a succeeding longitudinal parity frame.

3. The primary reason I've made such a poi[redacted] ompatibility is

Approved for Release: 2024/06/10 C05026032

C05026032

Approved for Release: 2024/06/10 C05026032

that the write and erase heads of one TM-11 and the BTM-9 were wired backward. This wiring error appeared to be at the head assembly.

c. With respect to compatibility, HRB should be asked to determine whether their transports are saturating the domains on tape in accordance with the IBM standard. After they determine that all of their transports meet this standard, they should erase one full tape on one of their transports and send it to me. Then I can use the Mag tape viewer to determine if our transports are compatible with theirs after I write a record on this erased tape. HRB can generate this tape easily by having a transport repeatedly erase 4 inches of tape until the EOT marker is reached.

5. Since there is some controversy over the editing capability of the SEL system, I would like to describe the problems I had to overcome before we could edit tapes. The first problem was compatability which was discussed in paragraph 4.b. above. The second problem was the adjustment procedure given by SEL and Ampex. In fact, if the adjustments given in the SEL and Ampex manuals are followed to the letter, it is unlikely that the transports will be able to edit. For example:

a. The threshold translator adjustments in the SEL TCU/MTU manual do not allow the data to be returned during all programming possibilities; however, the adjustment procedures I got from Vernon Wright at SEL do.

b. Ampex's Capstan Servo adjustment procedure is good, except that I've added some tests to show how the servo reacts under our worst programming conditions. These tests have shown some slight misadjustments that have kept the transport from running our programs.

c. Ampex's Reel Servo adjustment procedure no longer applies to our modified RRA boards.

6. As a follow-up on the above, my next memorandum to you will have a detailed adjustment procedure for this SEL and Ampex logic.

7. As proof of our machine's ability to edit BTM-9 tapes and SEL tapes, I would like to submit the following enclosures for your evaluation:

a. Enclosure (4) is a listing of a self checking test program. The purpose of this program is to let the operator know if a transport is capable of editing a data tape. If any errors are printed by the line printer, the operator should not use that that transport to edit. Error printouts serving as trouble-shooting aids are as follows: W1, W2, W3, W4, RE, =E, and CT. In general, 100 pairs of data records are placed on tape with each pair separated by an EOF. (see enclosure (5) for data listing) The tape is then rewound and the second record of each pair is replaced. After this the tape is rewound again and checked. (see enclosure (6) for final data listing) It is interesting to note that the record that was replaced was twice as long as the new record. (compare the second data records of enclosures (5) and (6))

Approved for Release: 2024/06/10 C05026032

C05026032

 Approved for Release: 2024/06/10 C05026032

HANDLE VIA BYEMA

CONTROL ~~SECRET~~ SYSTEM

PROJECT EARPOP

BYE-57856-68

b. Enclosure (7) is an object tape of the above program.

c. Enclosures (8) thru (11) show the results of editing an otherwise useless pass tape which has been forwarded to NSA. There are two passes on this tape, and each pass had header/trailer errors. The header record in the first pass was just filler data as can be seen in enclosures (8) and (9). And in the same enclosures, you can see a bad trailer record in the second pass. Enclosures (10) and (11) show the corrected header and trailer records. Unfortunately the trailer record is missing the last part of filler data because I forgot to change the word count constant for the BTC. This was not detected before because the QC program does not check filler data. The BYE No. on this tape that was sent to NSA is 57819-68.

8. Since it is impossible to edit a BTM-9 tape without the gap described in paragraph 4.a. above, I recommend that the modification shown in enclosure (3) be approved for inclusion in the existing BTM-9's. This would serve as an interim solution to editing BTM-9 tapes until Ampex could furnish a modification to place the gap ahead of the EOF.

Paul L. Lenker

Very respectfully,
PAUL L. LENKER

Approved for Release: 2024/06/10 C05026032

C05026032
Approved for Release: 2024/06/10 C05026032

BTM-9 Cabinet Changes

~~SECRET~~

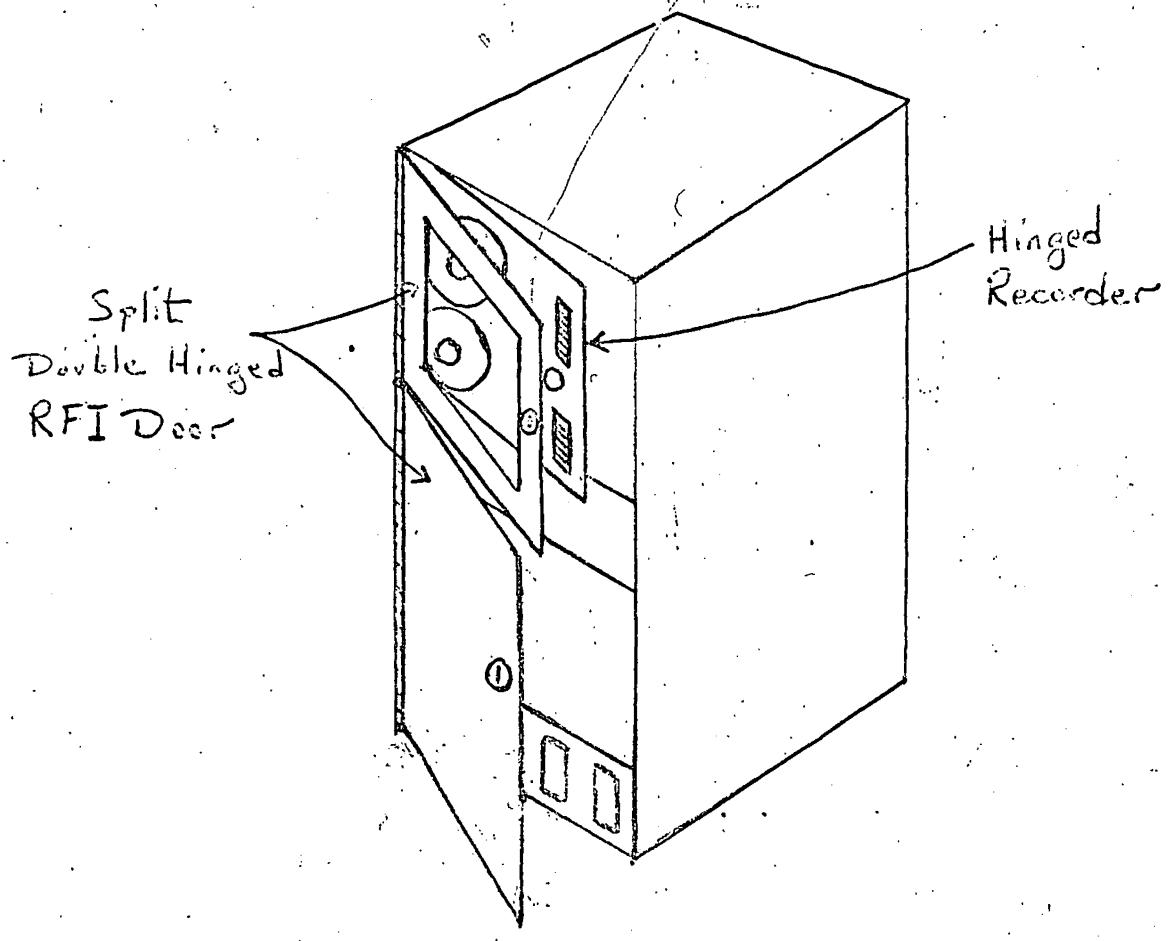

~~SECRET~~

HANDLE VIA
BYEMAN
CONTROL SYSTEM ONLY

D031

Bye-57856-68

PAGE 1 OF 1 PAGES

ENCLOSURE (1)

Approved for Release: 2024/06/10 C05026032

C05026032

Approved for Release: 2024/06/10 C05026032

SECRET

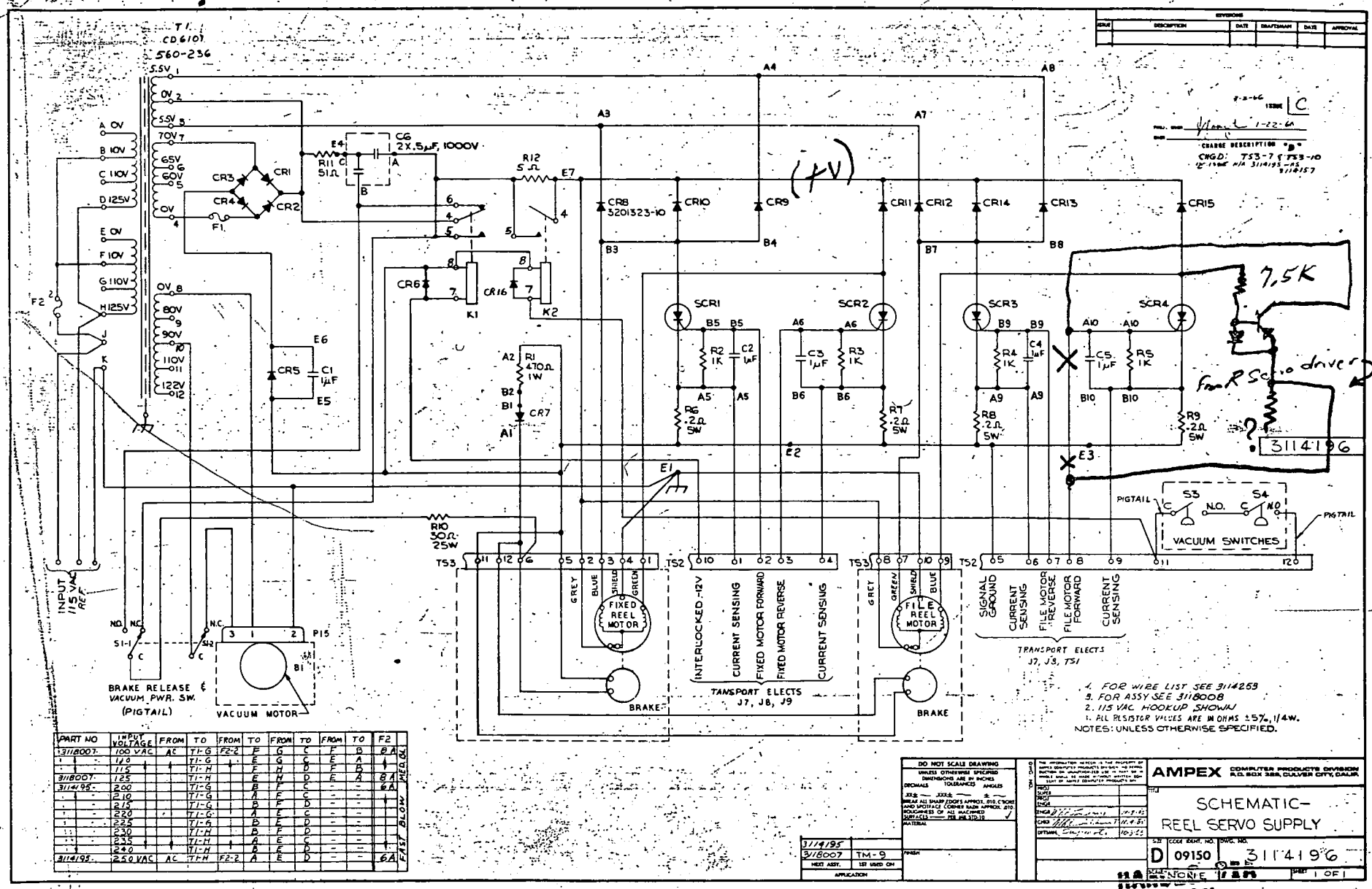

PART NO	INPUT VOLTAGE	FROM	TO	FROM	TO	FROM	TO	FROM	TO	F2	
3118007-	100 VAC	AC	T1-G	F2-2	F	G	C	F	B	8A	MED. BL
	110		T1-G		E	G	C	E	A		
	115		T1-H		F	H	D	F	B		
3118007-	125		T1-H		E	H	D	E	A	8A	
3114195-	200		T1-G		B	F	C	-	-	6A	FAST BLOW
	210		T1-G		A	F	C	-	-		
	215		T1-G		B	F	D	-	-		
	220		T1-G		A	E	C	-	-		
	225		T1-G		B	E	D	-	-		
	230		T1-H		B	F	D	-	-		
	235		T1-H		A	E	C	-	-		
	240		T1-H		B	E	D	-	-		
3114195-	250 VAC	AC	T1-H	F2-2	A	E	D	-	-	6A	

BYEMAN CONTROL SYSTEM ONLY

SECRET

Bye-57856-68 ENCLOSURE (2)

Approved for Release: 2024/06/10 C05026032

C05026032

Approved for Release: 2024/06/10 C05026032

SECRET

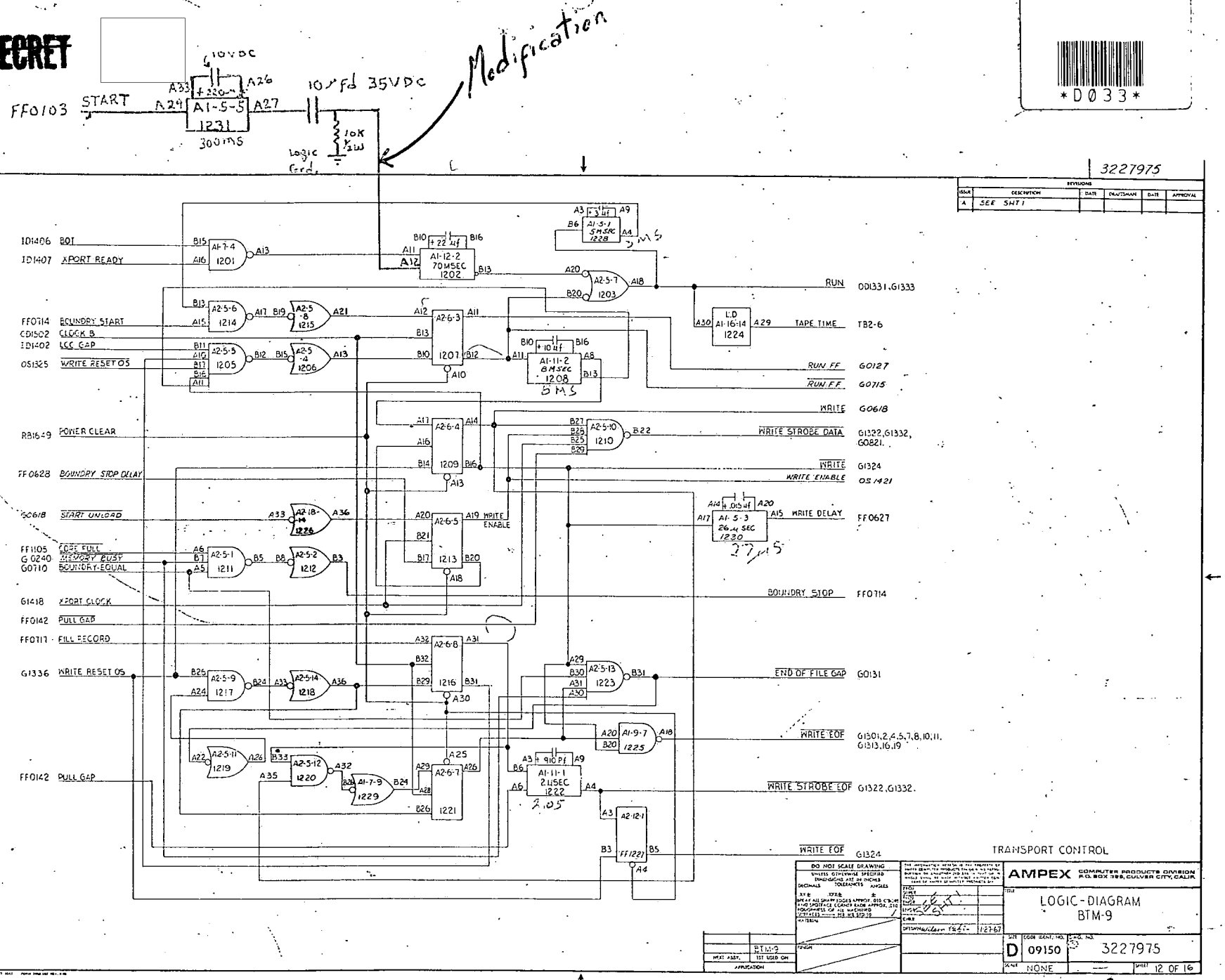

HANDLE VIA BYEMAN CONTROL SYSTEM ONLY

ENCLOSURE (3)

SECRET

Bye-57856-68

PAGE 1 OF 2 PAGES

Approved for Release: 2024/06/10 C05026032

SECRET

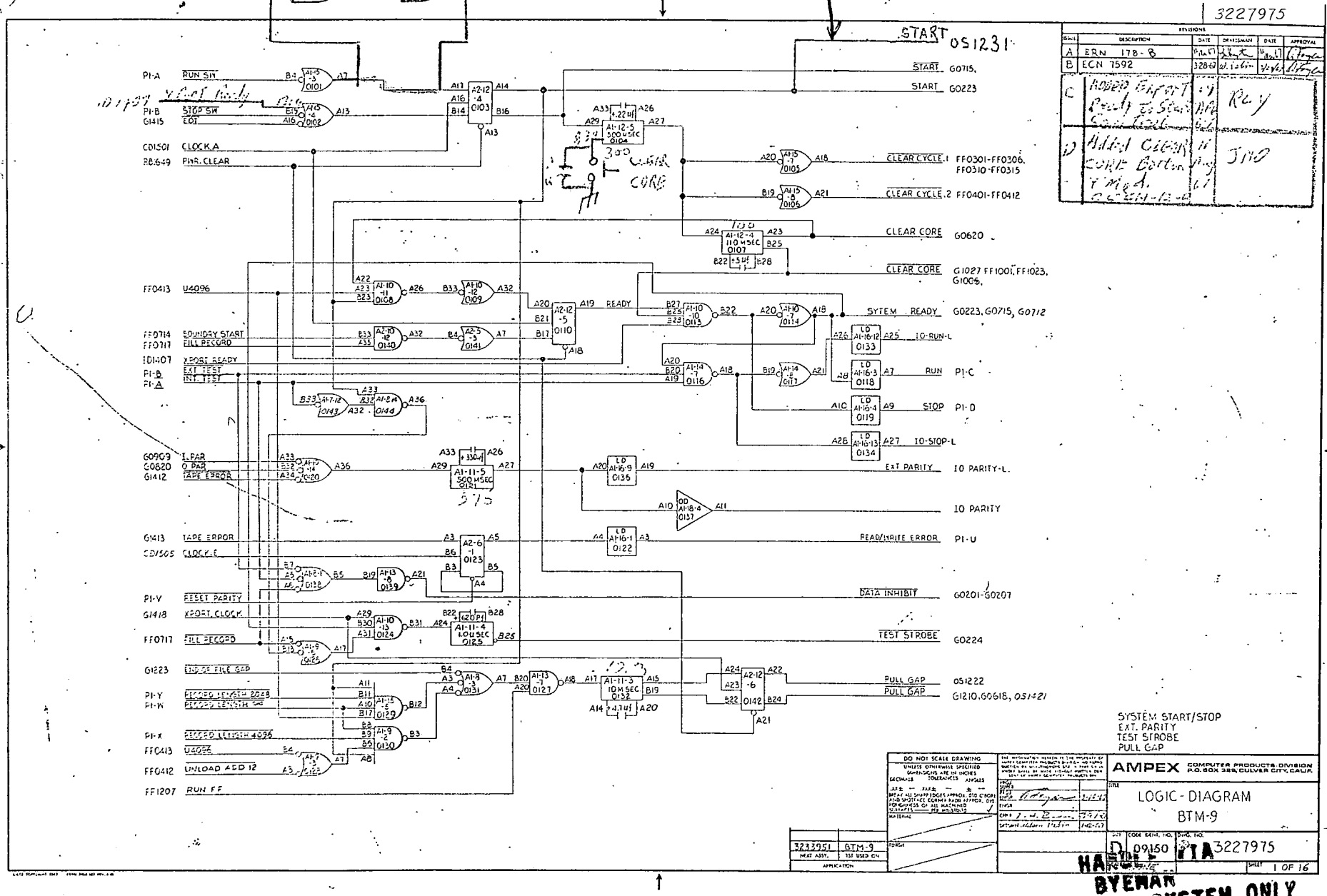

BYEMAN CONTROL SYSTEM ONLY

ENCLOSURE (3)

Bye-57856-68

SECRET

Approved for Release: 2024/06/10 C05026032

Approved for Release: 2024/06/10 C05026032

C05026032

C05026032
25X1
Approved for Release: 2024/06/10 C05026032

Page Denied

Approved for Release: 2024/06/10 C05026032

C05026032
25X1
Approved for Release: 2024/06/10 C05026032

Page Denied

Approved for Release: 2024/06/10 C05026032

C05026032
25X1
Approved for Release: 2024/06/10 C05026032

Page Denied

Approved for Release: 2024/06/10 C05026032

C05026032
25X1
Approved for Release: 2024/06/10 C05026032

Page Denied

Approved for Release: 2024/06/10 C05026032

C05026032
25X1
Approved for Release: 2024/06/10 C05026032

Page Denied

Approved for Release: 2024/06/10 C05026032

C05026032
25X1
Approved for Release: 2024/06/10 C05026032

Page Denied

Approved for Release: 2024/06/10 C05026032

C05026032
25X1
Approved for Release: 2024/06/10 C05026032

Page Denied

Approved for Release: 2024/06/10 C05026032

C05026032
25X1
Approved for Release: 2024/06/10 C05026032

Page Denied

Approved for Release: 2024/06/10 C05026032

C05026032
25X1
Approved for Release: 2024/06/10 C05026032

Page Denied

Approved for Release: 2024/06/10 C05026032

C05026032
25X1
Approved for Release: 2024/06/10 C05026032

Page Denied

Approved for Release: 2024/06/10 C05026032

C05026032
25X1
Approved for Release: 2024/06/10 C05026032

Page Denied

Approved for Release: 2024/06/10 C05026032

C05026032
25X1
Approved for Release: 2024/06/10 C05026032

Page Denied

Approved for Release: 2024/06/10 C05026032

C05026032
25X1
Approved for Release: 2024/06/10 C05026032

Page Denied

Approved for Release: 2024/06/10 C05026032

C05026032

Approved for Release: 2024/06/10 C05026032

~~SECRET~~

HANDLE VIA BYEMAN
CONTROL SYSTEM
PROJECT EARPOP

```
CATALOG  #  1EA19G
ENTER  DATE    10 JULY 1968
       TAPE#     000208
       MISSION 7105
SET SENSE SWITCH 8 FOR 800 BPI INPUT
SET SENSE SWITCH 1 TO OUTPUT ON T-33
PAUSE

EOF       00002   <- Indicates there was a record and an EOF
                     Should have been Simular to header below
EOF       00015
EOF       00101

--,--,--,--
--,--,--,--
12,--,--,--
12,--,--,--

EOF       00002

FD2
17
1968
190
00208
13
1
7105
05625
0--
145
2--
367
---
---
---
---

EOF       00002

EOF       00015

EOF       01035

08,--,--,--
07,--,--,--
--,--,--,--
--,--,--,--

EOF       00002

EOF

END OF JOB
```

Trailer & EOF

Good header & EOF

Erroneous Trailer

B 33-68

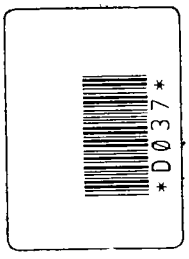

~~SECRET~~

HANDLE VIA BYEMAN
CONTROL SYSTEM
PROJECT EARPOP

PAGE 1 OF 1 PAGES

BYE-57856-68 COPY 1 OF 3 COPIES

ENCLOSURE (9)

Approved for Release: 2024/06/10 C05026032